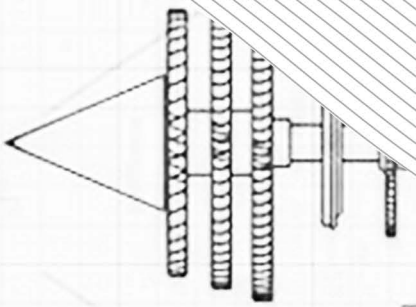

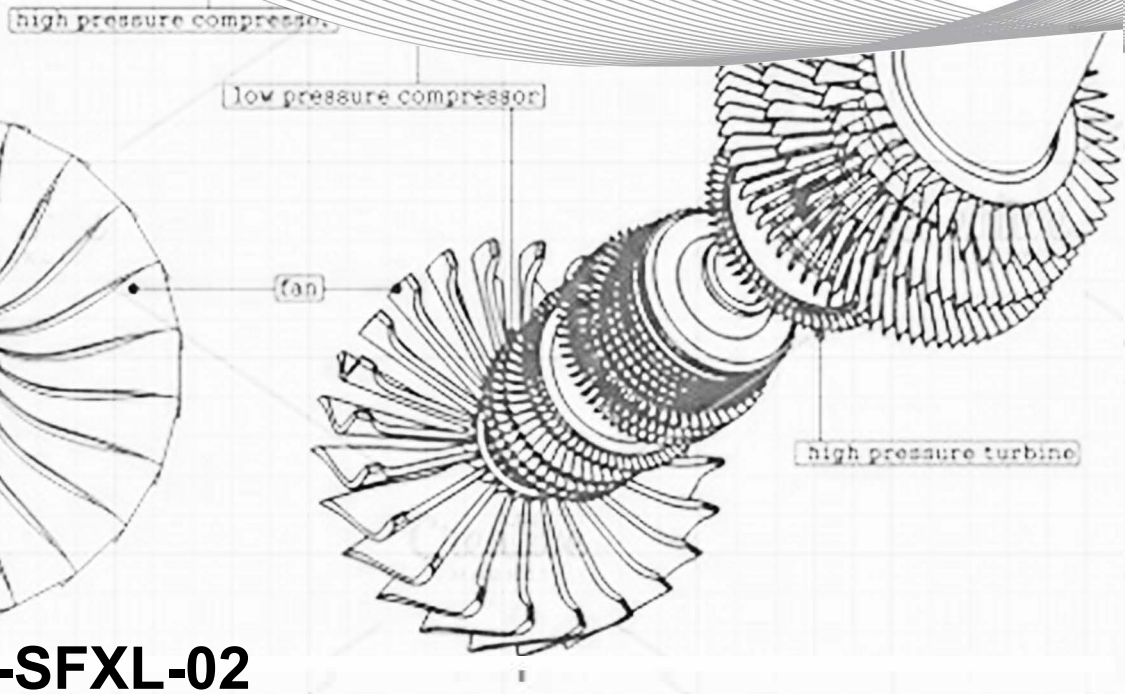


# MOD : WR-SFXL-02

**Production code : BASIC XL 2**

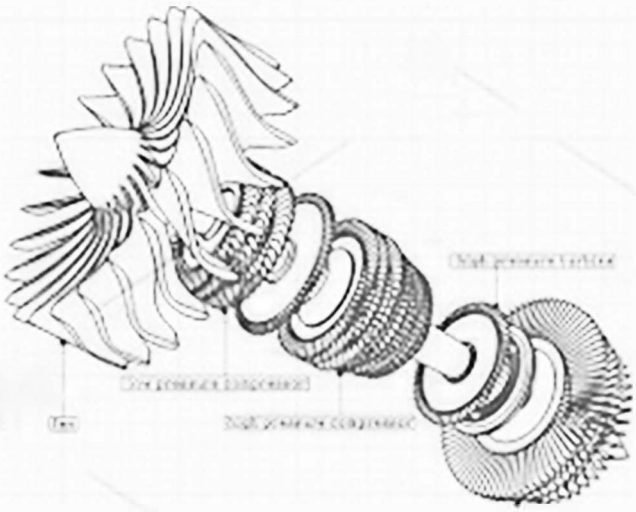

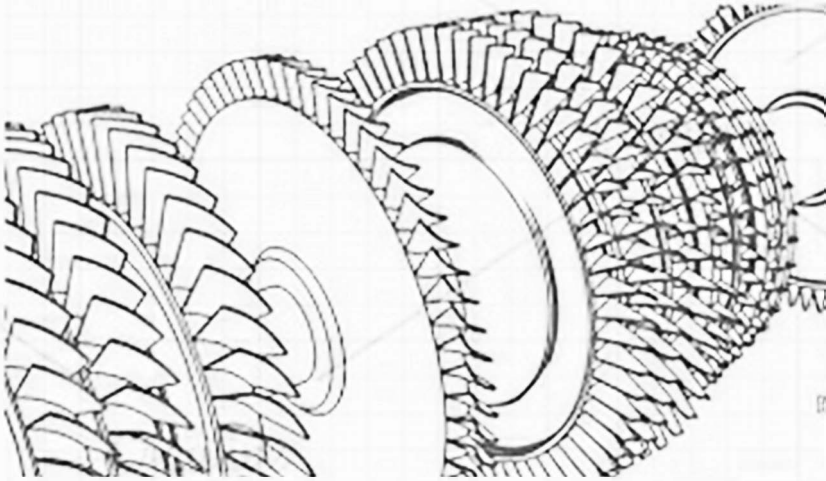

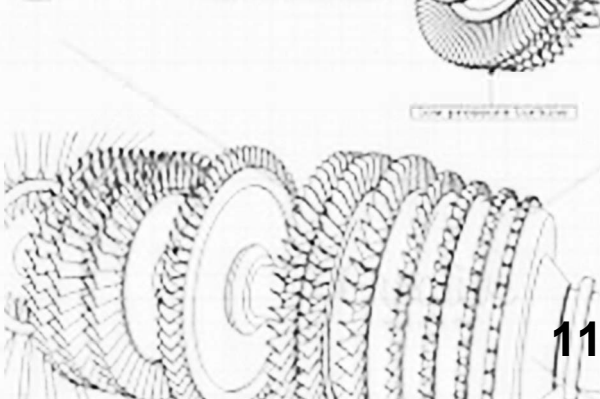

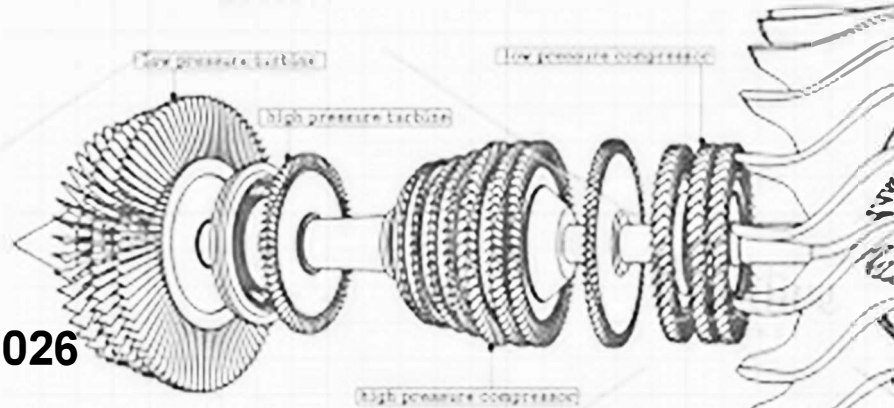

**11/2026**

| Pos. | WR-SFXL-02 | WR-DFXL-22 | WR-SFXL-03 | WR-DFXL-33 | Description |
|---|---|---|---|---|---|
| 1 | 7A010112 | | 7A010145 | | Complete door unit |
| 2 | 4P050070 | | 4P050018 | | Door |
| 3 | 5M200030 | | | | Door handle |
| 4 | 4P100007 | | 4P100090 | | Door Handle Plate |
| 5 | 3R030002 | | | | Door washer |
| 6 | 5V500104 | | | | Door screw |
| 7 | 5V500019 | | | | Screw |
| 8 | 5V500046 | | | | Screw |
| 9 | 5G100001 | | | | Glass door gasket |
| 10 | 5V010015 | | | | Door glass |
| 11 | 4C020070 | | 4C020028 | | Inner door |
| 12 | 4T020062 | | 4T020005 | | Frame |
| 13 | 4F020062 | 4F020067 | 4F020008 | 4F020009 | Front |
| 14 | 5P050132 | | 5P050135 | | Refractory stone |
| 15 | 4T060080 | | | | Iron rod |
| 16 | 5R050450 | | 5R050425 | | Heating element |
| 17 | 4P040041 | 4P040043 | 4P040041 | 4P040043 | Left side panel |
| 18 | 4C030028 | | 4C030015 | | Oven top |
| 19 | 4S030276 | 4S030279 | 4S030244 | 4S030245 | Oven back |
| 20 | 5M100120 | | | | Grounding terminal |
| 21 | 5P100003 | | | | Cable gland |
| 22 | 7P010200 | | | | Complete lamp holder unit |
| 23 | 5V010003 | | | | Lamp holder glass |
| 24 | 5L020008 | | | | Light bulb |
| 25 | 4P040040 | 4P040042 | 4P040040 | 4P040042 | Right side panel |
| 26 | 5T010001 | | | | Thermostat |
| 27 | 5I100022 | | | | Main switch |
| 28 | 4M020031 | | | | Control panel |
| 29 | 5E258407 | | | | Label |
| 30 | 5L020017 | | | | Heating elements indicator light |
| 31 | 5M200003 | | | | Thermostat knob |
| 32 | 5T010200 | | | | Thermometer |
| 33 | 5I100017 | | | | Light switch |
| 34 | 5M200008 | | | | Main switch knob |
| 35 | 5M100010 | | | | Terminal block |

# EXPLODED VIEW

WR-SFXL-02
WR-DFXL-22

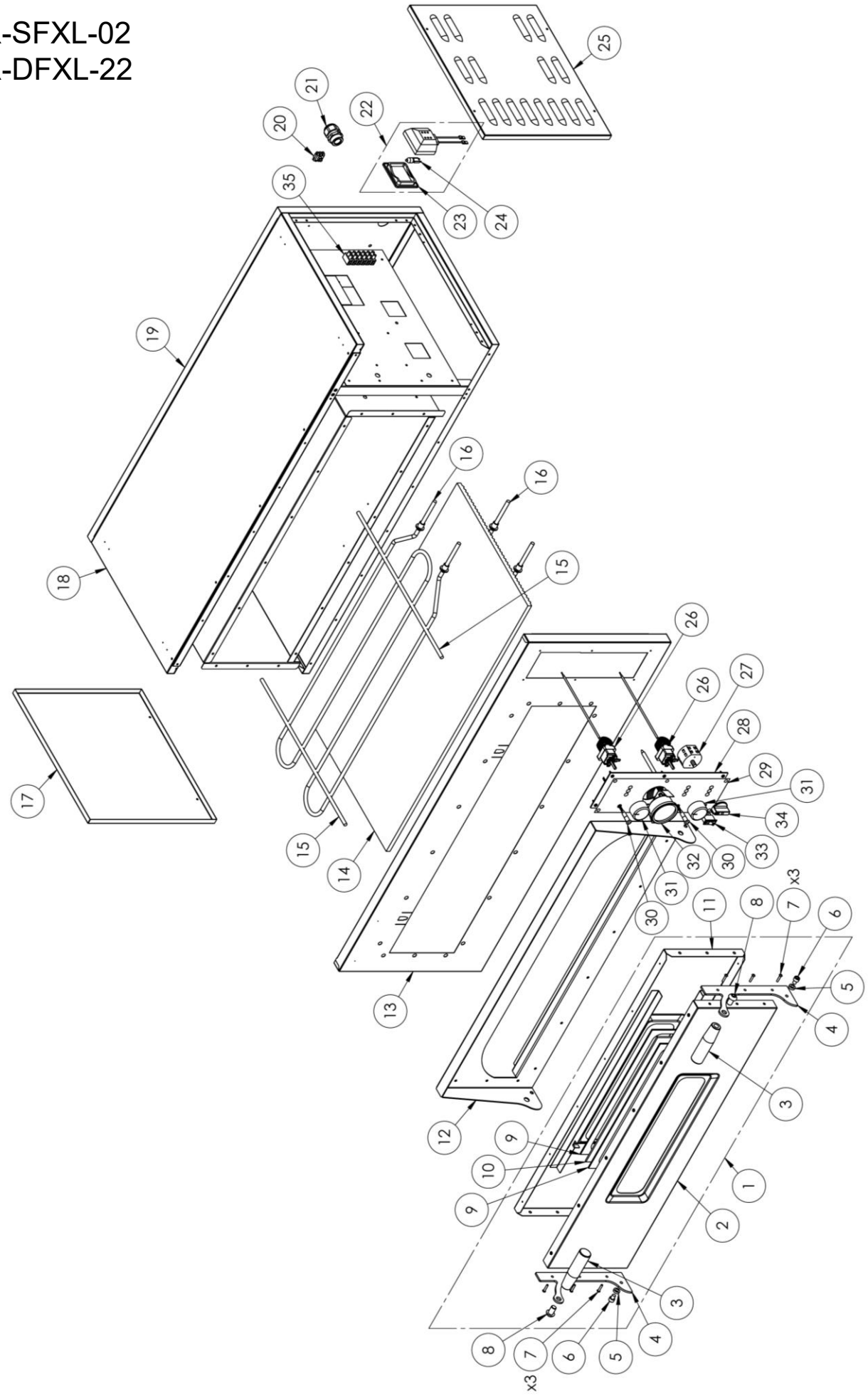

WR-SFXL-03
WR-DFXL-33

