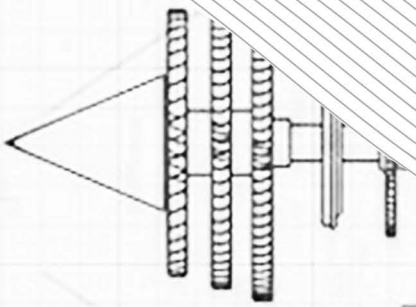

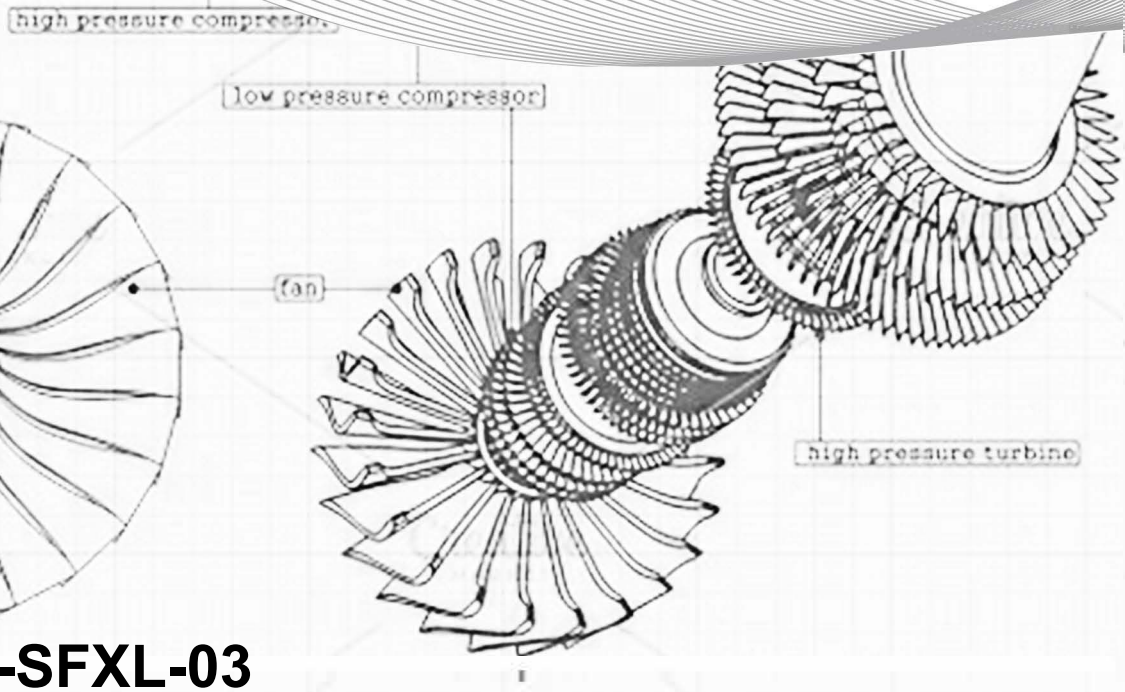

MOD : WR-SFXL-03

Production code : BASIC XL 3

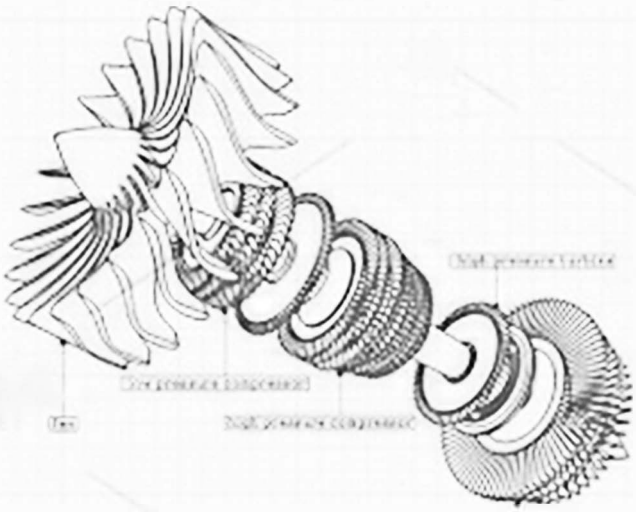

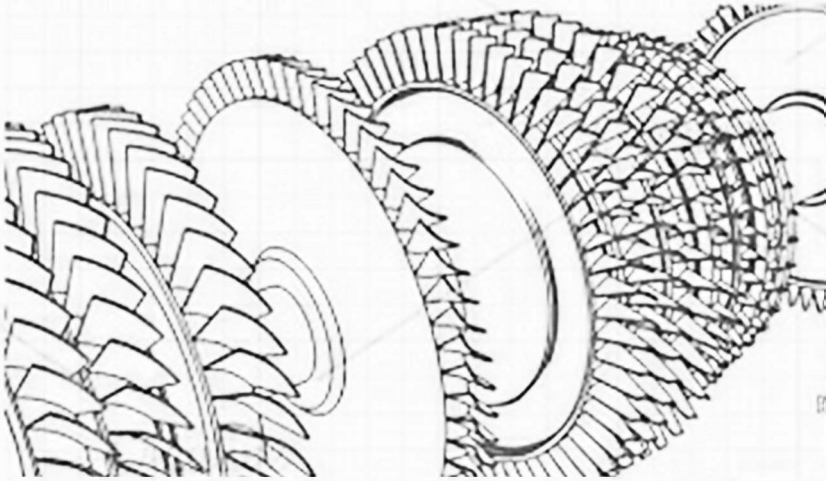

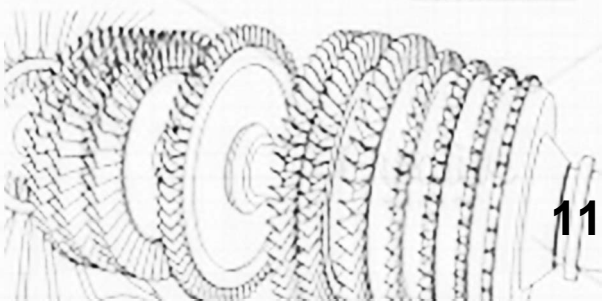

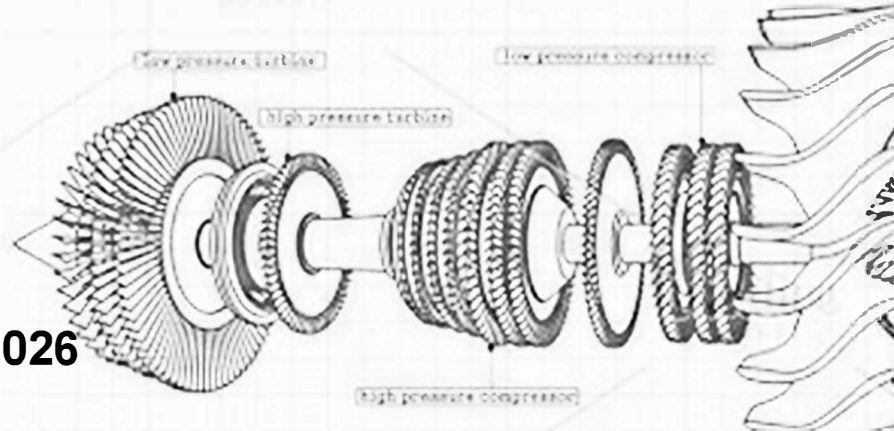

11/2026

Pos.	WR-SFXL-02	WR-DFXL-22	WR-SFXL-03	WR-DFXL-33	Description
1	7A010112		7A010145		Complete door unit
2	4P050070		4P050018		Door
3	5M200030				Door handle
4	4P100007		4P100090		Door Handle Plate
5	3R030002				Door washer
6	5V500104				Door screw
7	5V500019				Screw
8	5V500046				Screw
9	5G100001				Glass door gasket
10	5V010015				Door glass
11	4C020070		4C020028		Inner door
12	4T020062		4T020005		Frame
13	4F020062	4F020067	4F020008	4F020009	Front
14	5P050132		5P050135		Refractory stone
15	4T060080				Iron rod
16	5R050450		5R050425		Heating element
17	4P040041	4P040043	4P040041	4P040043	Left side panel
18	4C030028		4C030015		Oven top
19	4S030276	4S030279	4S030244	4S030245	Oven back
20	5M100120				Grounding terminal
21	5P100003				Cable gland
22	7P010200				Complete lamp holder unit
23	5V010003				Lamp holder glass
24	5L020008				Light bulb
25	4P040040	4P040042	4P040040	4P040042	Right side panel
26	5T010001				Thermostat
27	5I100022				Main switch
28	4M020031				Control panel
29	5E258407				Label
30	5L020017				Heating elements indicator light
31	5M200003				Thermostat knob
32	5T010200				Thermometer
33	5I100017				Light switch
34	5M200008				Main switch knob
35	5M100010				Terminal block

EXPLODED VIEW

WR-SFXL-02
WR-DFXL-22

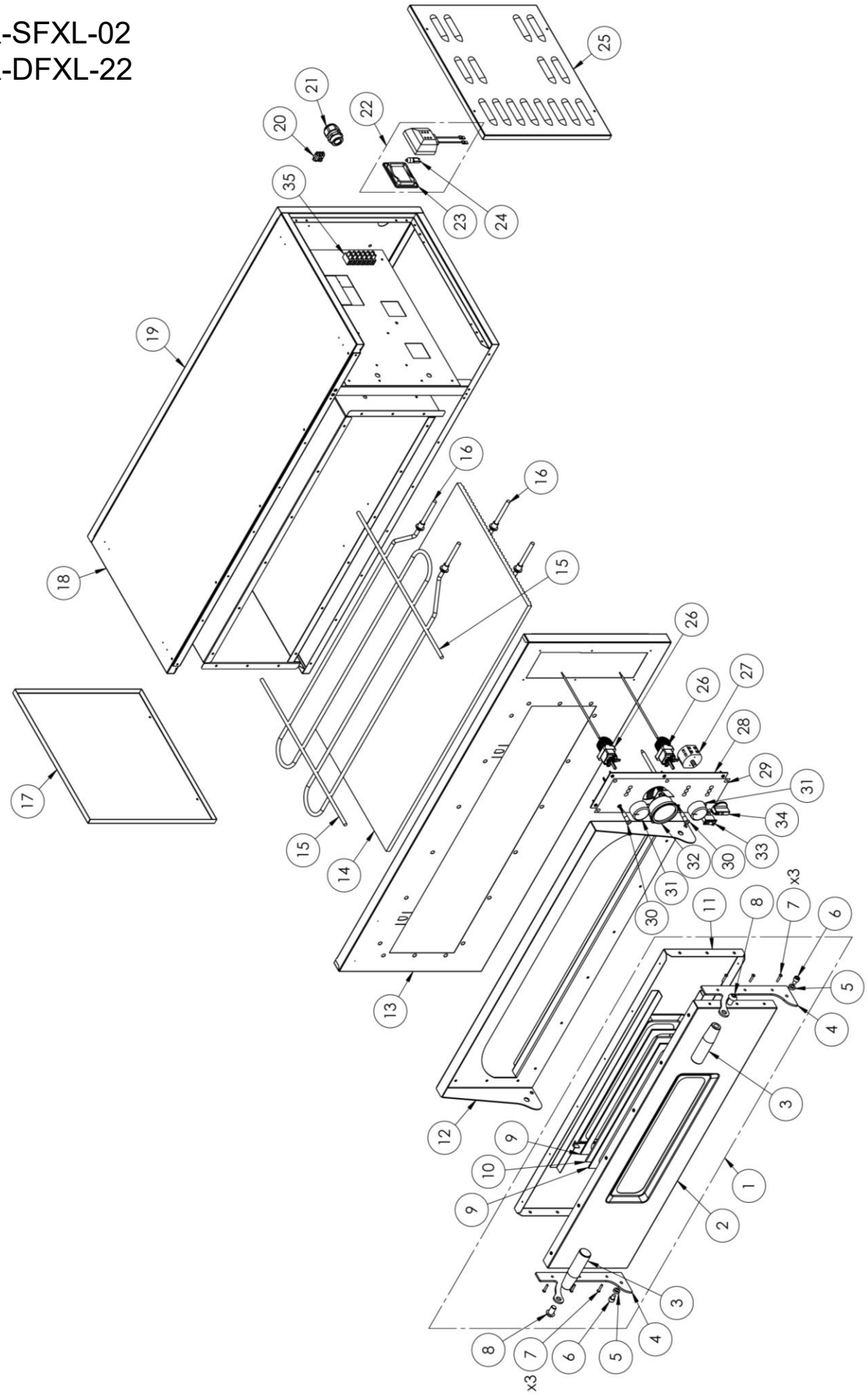

WR-SFXL-03
WR-DFXL-33

