MOD : TOP7-R2

Production code : TOP 7/E_

10/2026

ENGLISH

DIRECTIONS

- Cabinet with incorporated plug (Max 16 A) for the connection with an electric system complying with the rules which has been carried out or inspected by skilled technical staff.
- Unplug the cabinet before executing cleaning or service operations.
- Repairs and lights replacement must be carried out by skilled technical staff.
- Make sure children do not play with the cabinet.
- Do not touch the working cabinet barefoot or with wet hands
- This cabinet has been projected for the storage, the display and the sale of frozen foods and ice cream in special bins only: the manufacturer refuses all responsability resulting from a misusage of the cabinet (eg.: cooling drinks in corked containers, deep-frozing foods, etc.).
- The cabinet contains oil, cooling gas, polyurethane foam, plastic and metallic components and glass. The demolition of the cabinet and the recovery of the component materials must be carried out according to the regulations in force in this matter.
- Do not wet the cabinet with water or other liquids jets. You may risk to damage the electrical equipement.
- The cabinet shall not be used exposed to the rain.
- The cabinet is not suitable for working in dangerous environment with risk of fire, explosion or radiation.

HANDLING AND TRANSPORT

- The crated cabinet has a wooden board suitable for lifting by fork lifts or transpallets (Picture 5).
- The cabinet is equipped with pivoting wheels.

INSTALLATION

- Unpack the cabinet
- The packing stuff (plastic bags, nails, screws, polystyrene, etc.) must not be kept within children's reach because it could be dangerous.
- Remove the board removing the 2 screws A which fix it to the cabinet (Picture 7)
- Clean the cabinet (inside/outside) with a warm water using a no-abrasive sponge and dry it with a soft cloth.
- Make sure:
  - the socket is suitable for the plug, has an efficient earthed line, is protected by a differential magnetothermic switch and has a suitable reach. (16 A).
  - voltage and frequency of the electric power are according to the data related on the identification rating plate placed od the side of the cabinet. (Picture 10)

The cabinet's earthing is compulsory according to the law.
The manufacturer refuses all responsability for failing observance of this specification.

- Thecabinet has to be flat located, far from heat sources (heating plants, stoves, sun) in order to obtain the best performances (Picture 6).
- If the cabinet is equipped with scooper holder (OPTIONAL), assemble it as shown in Picture 8. The support must be screwed to the back wall in the special holes after removing the plugs.
- The inlet union (IN-3/8" gas) must be equipped with cock and connected to the drinking water plant. Regulate the flow at about 1 liter/hour water
- The outlet union (●UT-1/2" gas) must be connected to the water outlet of the room.

- Make sure the aeration grids on the base of the cabinet are not clogged by foreign matter.
- Allow for a minimum distance of 10 cm. from the walls.
- Make sure the knob of the thermostat C is not in the STOP position (Picture 2-3-4)
- Plug the cabinet in (after having checked that the feeding cable is not cut-off) and wait for it to reach the operating temperature before introducing the ice cream bins.
- The cabinet must be connected with a fixed socket (no extension or multiple plugs) and the feeding cable must be located in a sheltered position (no passing-area). (Picture 6).
- Dismantled canopy: if the cabinet has been supplied with dismantled glasses kit. assemble the components complying with the operations succession shown at Picture 11 (Picture 15 for models J Extra).

USE

- Ice cream must be introduced in the cabinet at the storage temperature: the cabinet is not suited to reduce ice cream temperature.
- This cabinet is suitable for the storage of ice cream in the ambient conditions given on the identification rating plate. (Picture 10).
- For the correct running of the cabinet and to save energy the tip-top cover and the reserve bay's door must be immediately closed after use.
- The inner temperature of the tank can be regulated through the knob of the thermostat C (Picture 2-3-4: turning clockwise the temperature decreases).
- Do not use the cabinet for cooling foods or drinks (e.g.: tea, syrups, fruit, spirits, etc.) because it harms the normal ice cream storage.
- Ice cream bins arrangement: Mod. TOP/E see Picture 12 and 13
  Mod. TANGO, X and J see Picture 14.

CONTROLS (Picture 2)

C = Inner temperature regulation thermostat.
T = Tank inner temperature indicating thermometer (MAX level)
L = Mains voltage luminous indicator - ruming switch
I = Ice cream display tank light switch.
S = Manual defrosting control (Press the button for 5 seconds)

With electronic gearcase (Picture 3)
SI = Cabinet defrosting indicator
M = Motor-driven compressor in indicator
SET +/- = Inner temperature programming keys
* Pushing the keys SET and + the programmed temperature rises
* Pushing the keys SET and - the programmed temperature falls

TANGO 12/E (Picture 4)
C = Display tank temperature regulation thermostat
T = Display tank temperature indicator thermometer (MAX level)
L = Display tank refrigerating unit running switch
I = Display tank light switch
S = Additional defrosting control (Press the button for 5 seconds)
C1 = Reserve bay temperature regulation thermostat
T1 = Reserve bay temperature indicator thermometer
L1 = Reserve bay cooling unit running switch

INSPECTIONS AND MAINTENANCE

EVERY DAY

- Check the operating temperature inside the tank through the thermometers T (Picture 2-3-4)
- The cabinet is equipped with automatic defrost: make sure the finned evaporator E (Picture 7) is not clogged by ice.
- Check the ventilation of the refrigerating units: the compressor housing grids on the bottom of the cabinet must not be clogged (eg.: boxes, paper).

EVERY MONTH

- Clean the cabinet (as described at INSTALLATION) after having unplugged it and removed the ice cream bins.
- The inside part intended for the ice cream storage must be carefully cleaned avoiding the use of cleansers or products no compatible with foods.
- In order to make easier the drain of the water accumulated in the reserve bay, remove D plug (Picture 7) taking care to place it again at the end of the operation.
- Make sure the finned condensers (visible through the compressor housing grids) are not clogged (eg.: fluff, dust).

For an excellent running of the cabinet and to save energy, it is very important the finned condensers are clean: the cleaning is to be carried out by skilled technical staff, who will proceed as follows:

CLEANING OF THE CONDENSER: (Picture 9)

1 Unplug the cabinet.
2 Remove the compressor housing protection grids.
3 Clean the condenser with a brush, an air jet or a vacuum cleaner in order to avoid damaging the cabinet.
4 Reassemble the protection grids through the special fastening screws.
5 Plug the cabinet in.

EVERY TWO YEARS

- Get the cabinet checked by skilled technical staff to make sure:
  - The inside components of the compressor housing are clean
  - The electric system of the cabinet is not cut-off
  - The cabinet works properly (Thermic performance).

It is advisable to get a written declaration about the good working order of the cabinet.

- The replacement of the feeding cable must be carried out by skilled technical staff, using cable with indissoluble plug and a minimum wire section of 3 x 1,5 mm^2.
- The wiring diagram is supplied in a special envelope and must be carefully ke , together with this handbook and the certificate of guarantee.
- In TOP/E, X and J models the wiring diagram is placed inside the electric plant space.
- If the cabinet shows working problems, it is advisable to check if:
  - The plug is well connected with the socket and the electric energy is on.
  - The thermostat knob is not in the STOP position or on minimum.

After these inspections, if the problem persists, ask to the Service Center for assistance.

Fig. 1 **Mod. TOP7-R2**

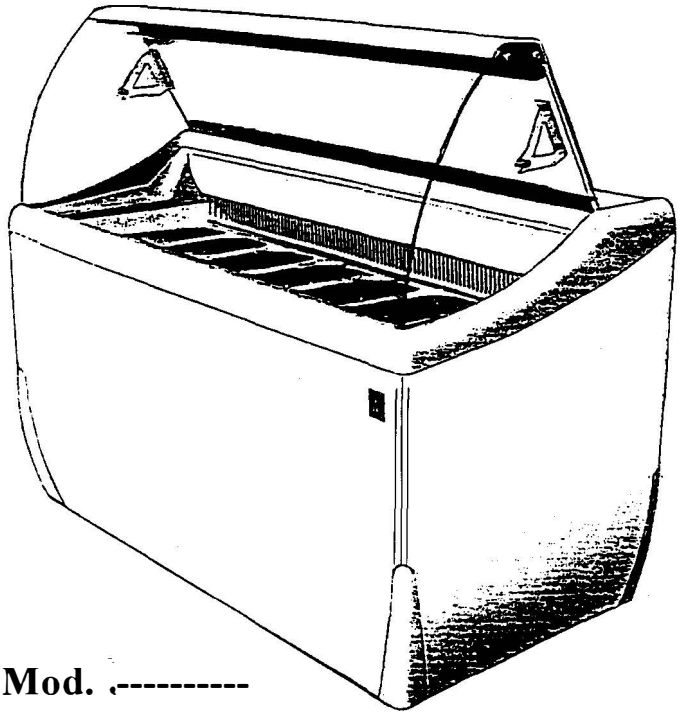

Mod. ----------

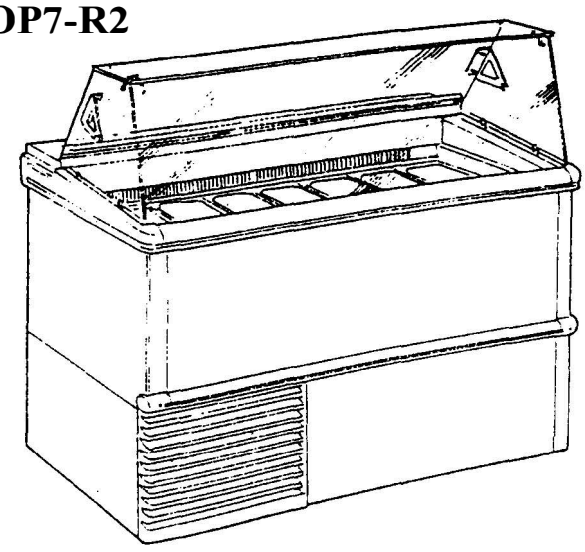

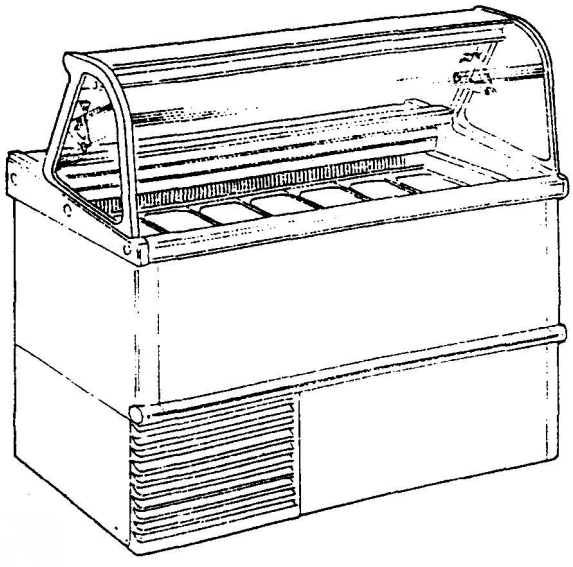

Mod. ----------

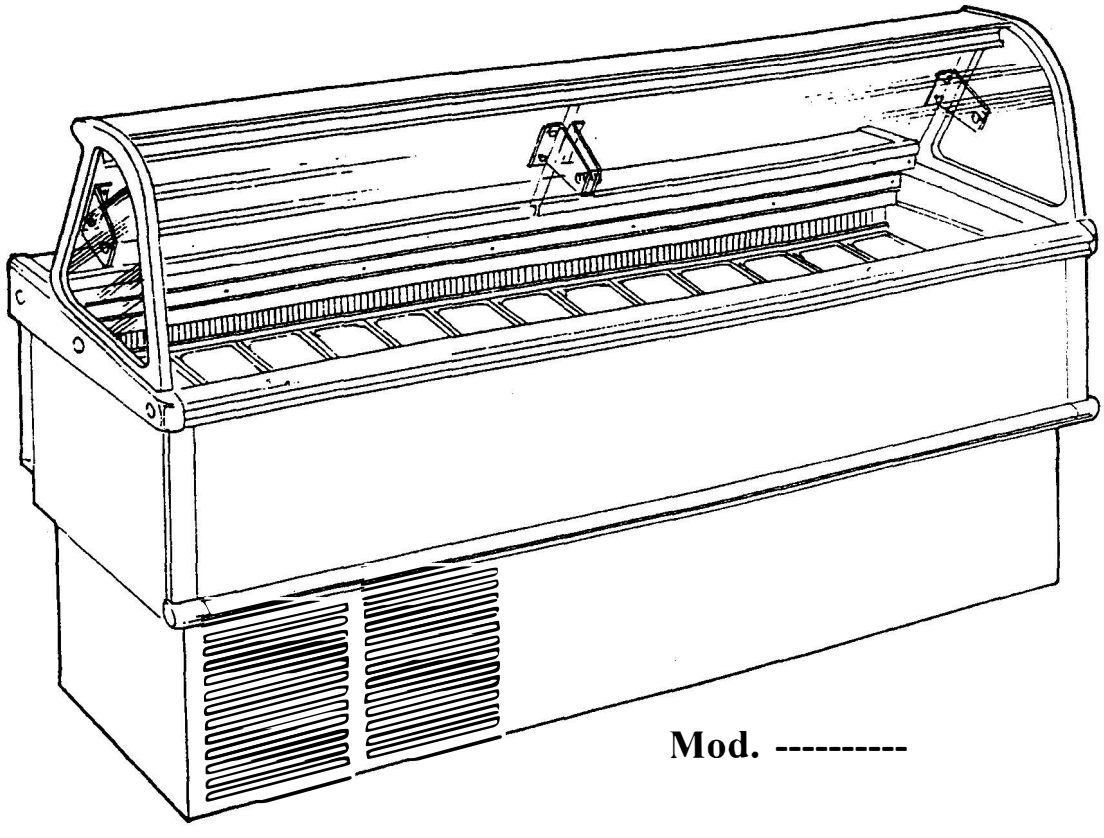

Mod. ----------

Fig. 2

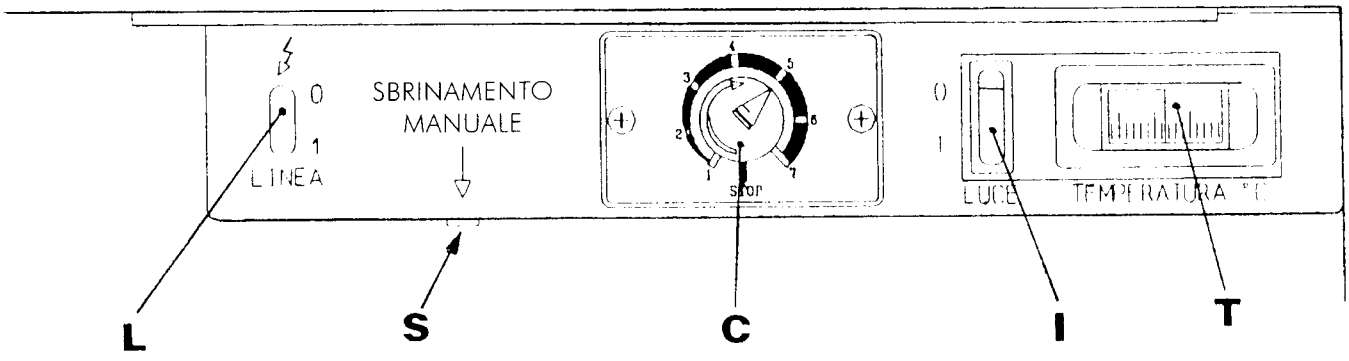

Fig. 3

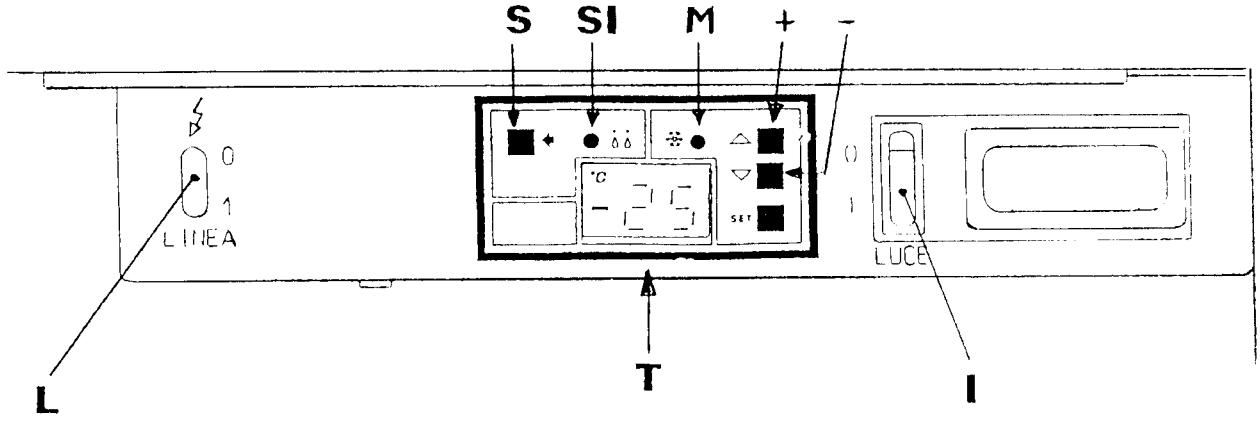

Fig. 4

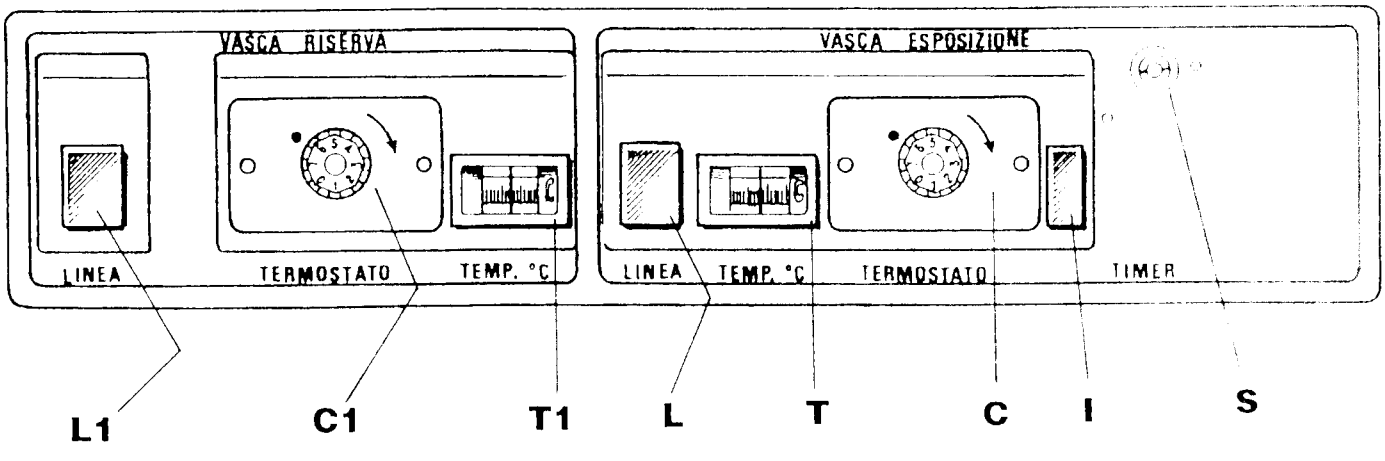

Fig. 5

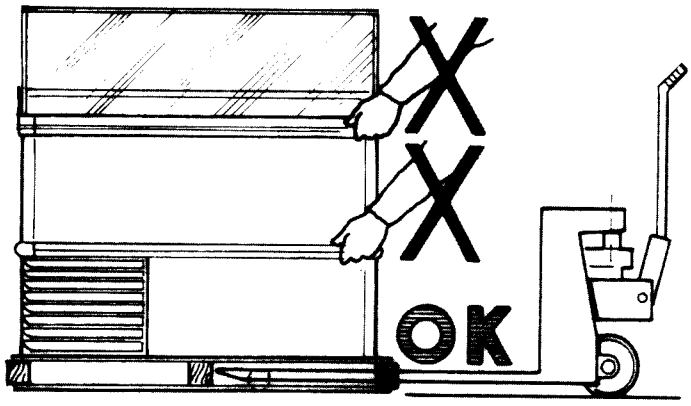

Fig. 6

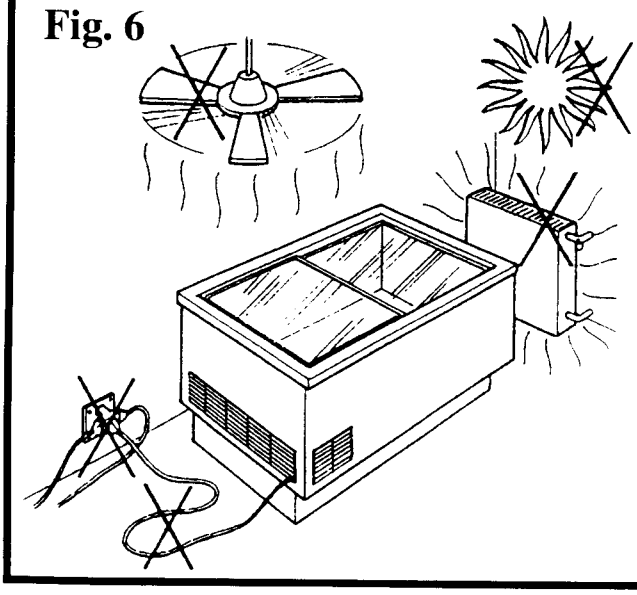

Fig. 7

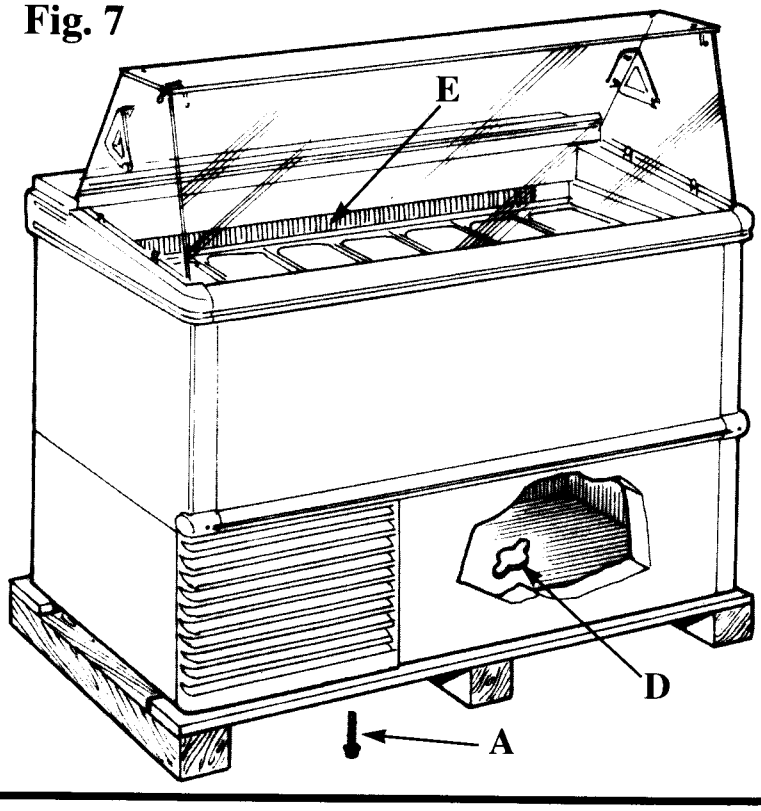

Fig. 8

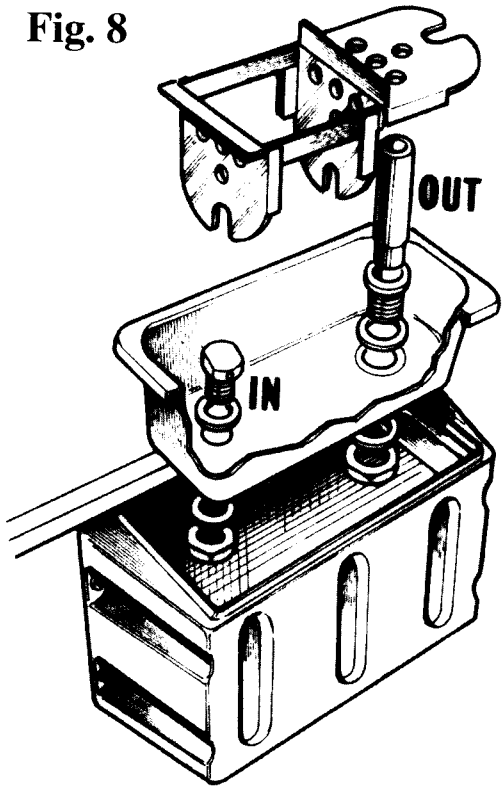

Fig. 9

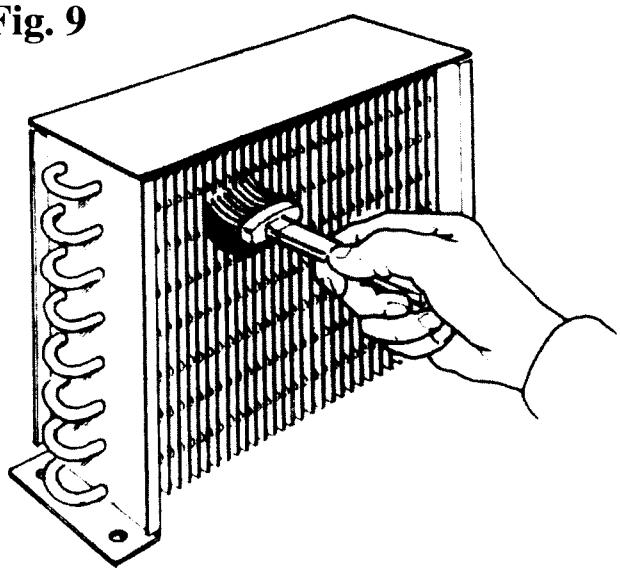

Fig. 10

Mod.	Serial N.	Prod.
TENSIONE / ALIMENTATION	Volt	Hz Fuse A
POT. NOMINALE / NOMINAL POWER		W
POT. SBRINAMENTO / DEFROST POWER		W
POT. LAMPADE / LIGHTS POWER		W
REFRIGERANT (Y)		Kg
REFRIGERANT (X)		Kg
CAPACITA' / CAPACITY		dm³
CLASSE CLIMATICA / CLASS	C	R H
TESTED 31 bar		Made in Italy