MOD : BRIOICE-R2

Production code : BRIO ICE 4 SK_

10/2026

ENGLISH

DIRECTIONS

- Cabinet with incorporated plug (10 A) for the connection with an electric system complying with the rules which has been carried out or inspected by skilled technical staff.
- Unplug the cabinet before executing cleaning or service operations.
- Repairs must be carried out by skilled technical staff when the cabinet is disconnected from the outlet.
- Make sure children do not play with the cabinet.
- Do not touch the working cabinet barefoot or with wet hands.
- Do not wash the cabinet throug water jets: the electric installation can be damaged.
- The manufacturer refuses all responsability resulting from wrong installation and misusage of the cabinet.
- The cabinet contains oil, cooling gas, polyurethane foam, plastic and metallic components and glass. The demolition of the cabinet and the recovery of the component materials must be carried out according to the regulations in force in this matter.
- The cabinet is not suitable for working in dangerous environment with risk of fir explosion or radiation.
- The cabinet shall not be used exposed to the rain.

HANDLING AND TRANSPORT

- The crated cabinet has a wooden pallet suitable for lifting by fork lifts or transpallet.

INSTALLATION

- Unpack the cabinet. The packing stuff (plastic bags, nails, screws, polystyrene, etc.) must not be kept within children's reach because it could be dangerous. The packing materials must be disposed selecting them under provisions of the law.
- Clean the cabinet (inside/outside) with a solution of warm water and neutral soap using a non-abrasive sponge and dry it with a soft cloth.
- Place the supports S and the grid shelves R (Picture 3)
- Make sure:
  - the socket is suitable for the plug, has an efficient earthed line, is protected by a differential magnetothermic switch and has a suitable reach. (10 A).
  - voltage and frequency of the electric power are according to the data related on the identification rating plate of the cabinet (Picture 4).

The cabinet's earthing is compulsory according to the law.
The manufacturer refuses all responsability for failing observance of this specification.

- The cabinet must be flat located, far from heat sources (heating plants, stoves, sun) and draughts, in order to obtain the best performances.
- Make sure the aeration grid on the base of the cabinet are not clogged by foreign matter.
- Allow for a minimum distance of 10 cm. from the walls.
- Plug the cabinet in (after having checked that the feeding cable is not cut-off) and wait for it to reach the operating temperature before introducing the product.
- The cabinet must be connected to a fixed socket (no extension or multiple plugs) and the feeding cable must be located in a sheltered position (no passing-area). (Picture 2).

USE

- This cabinet **is not suitable for the deep-freezing** of the products, but for keeping them frozen (-18 °C) in the ambient conditions given on the identification rating plate placed on the cabinet side (Picture 4).
- Frozen products must be at a storage temperature not higher than -18 °C. Before introducing the product in the cabinet make sure it has the established temperature of -18 °C or lower.
- The arrangement of the products inside the case must not exceed the maximum loading level indications inside the storage tank (Red lines).
- Periodically move and relocate the product to avoid it to remain too long on the bottom of the storage tank.

Never try to remove the ice through sharp metalware.

CONTROLS (Picture 1)

T = Inner temperature regulation thermostat
C = Inner tank temperature indicating thermometer (MAX level)
IC = Thermostat position indicator (higher numbers = colder in the tank)

INSPECTIONS AND MAINTENANCE

EVERY DAY

- Check the operating temperature inside the tank through the thermometer C.

EVERY MONTH

- Clean the cabinet (as described at INSTALLATION) after having unplugged it.
- Make sure the finned condenser (visible through the engine compressor housing grids) are not clogged (eg.: fluff, dust).

For an excellent running of the cabinet and to save energy, it is very important the finned condensers are clean: the cleaning is to be carried out by skilled technical staff, who will proceed as follows:

CLEANING OF THE CONDENSER: (Picture 3)

- Unplug the cabinet.
- Remove the compressor housing grids.
- Clean the condenser with a brush, an air jet or a vacuum cleaner in order to avoid damaging the cabinet.
- Reassemble the protection grids through the special fastening screws.
- Plug the cabinet in.

- The cabinet is not equipped with automatic defrost system. It must be manually defrosted when the frost completely covers the inner walls of the tank.

DEFROSTING:

1 Unplug the cabinet.
2 Take the product out and put it in another working cabinet.
3 Remove the plug D (Picture 3), and let the inner ice melt.
4 Dry the inside of the storage tank with sponge and a soft cloth.
5 Place the plug D again.
6 Plug the cabinet in.
7 Wait for the cabinet to reach the operating temperature before introducing the product again.

EVERY TWO YEARS

- Get the cabinet checked by skilled technical staff to make sure:
  - the inner components are clean.
  - the electric system of the cabinet is not cut-off.
  - the cabinet works properly (Thermic performance).

It is advisable to get a written declaration about the good working order of the cabinet.

- The replacement of the feeding cable is to be carried out by skilled technical staff, using a cable with a minimum wire section 3 x 1,5 mm^2.
- The wiring diagram is placed on the cabinet side.
- If the cabinet shows working problems, it is advisable to check if:
  - the plug is well connected to the socket and the electric power is on.
  - the thermostat knob is not in the OFF position or on minimum.

After these inspections, if the problem persists, ask to the Service Center for assistance.

BRIOICE-R2

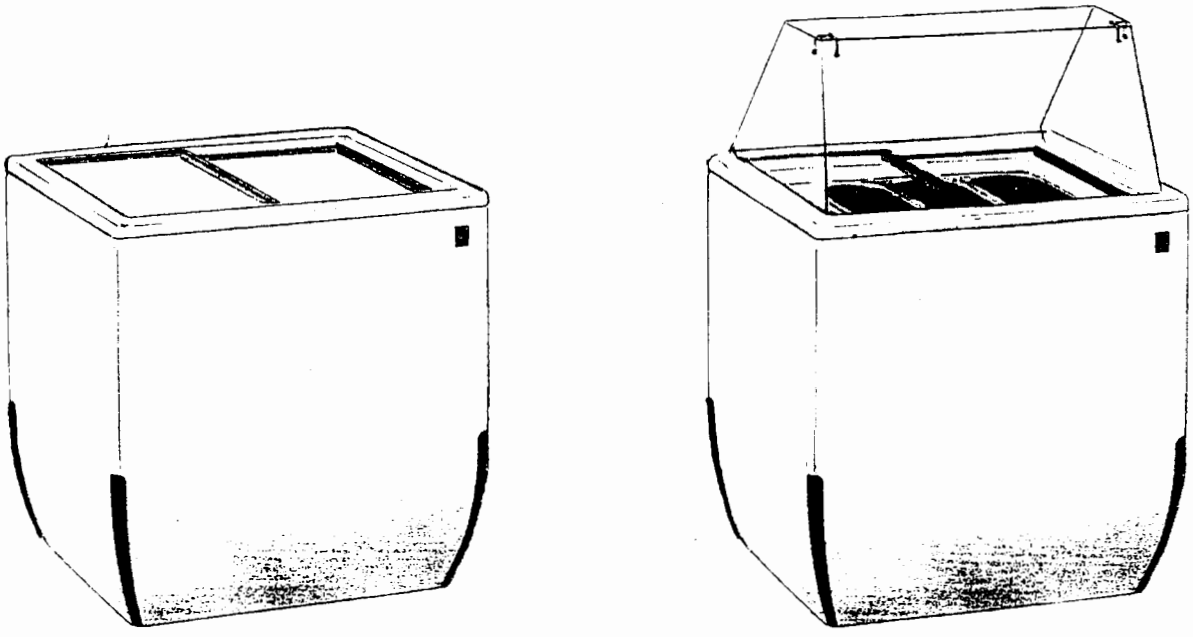

Fig. 1

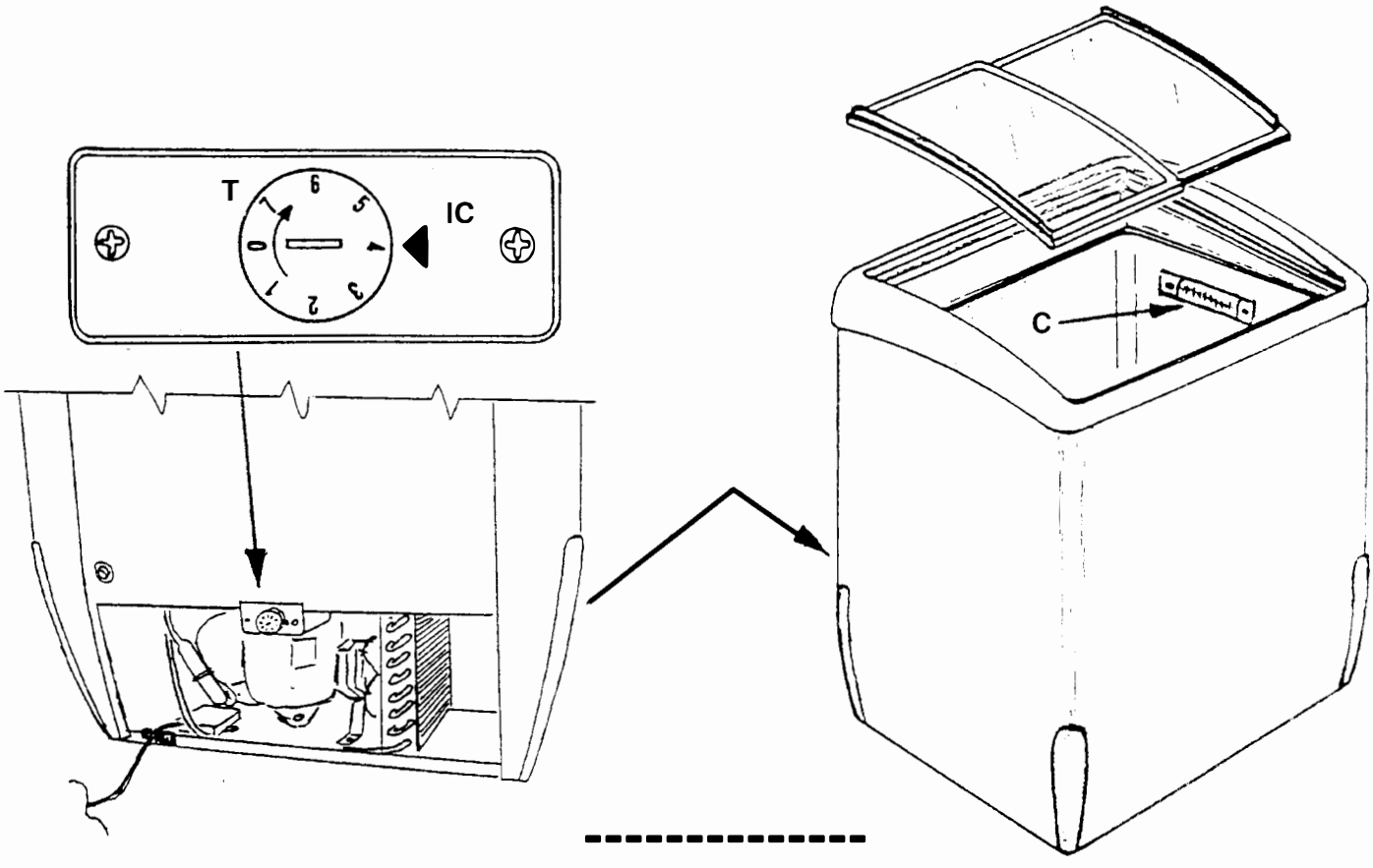

Fig. 2

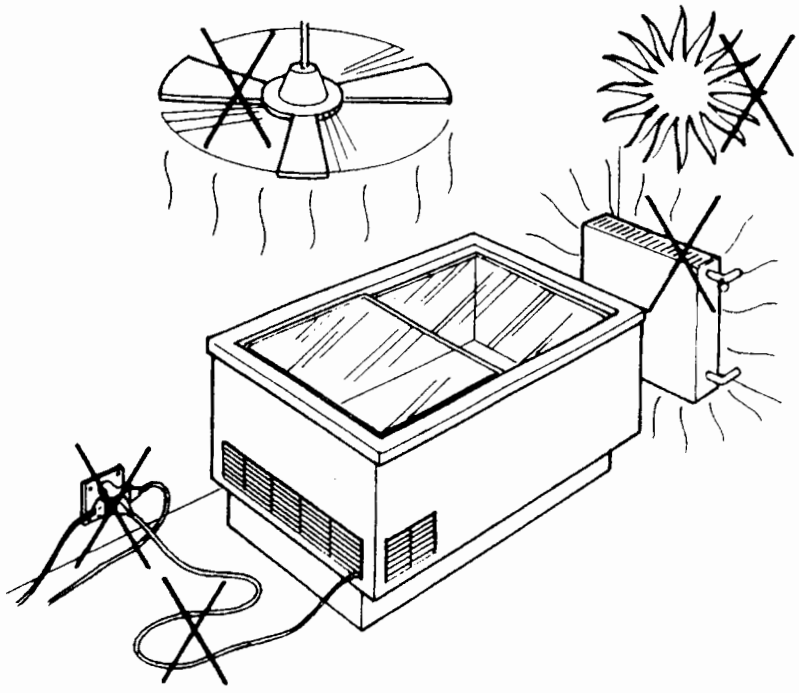

Fig. 3

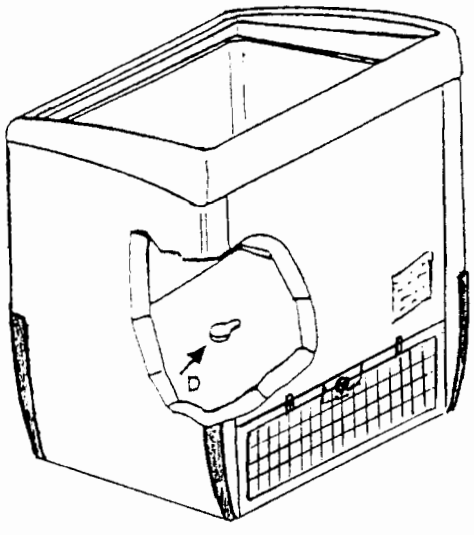

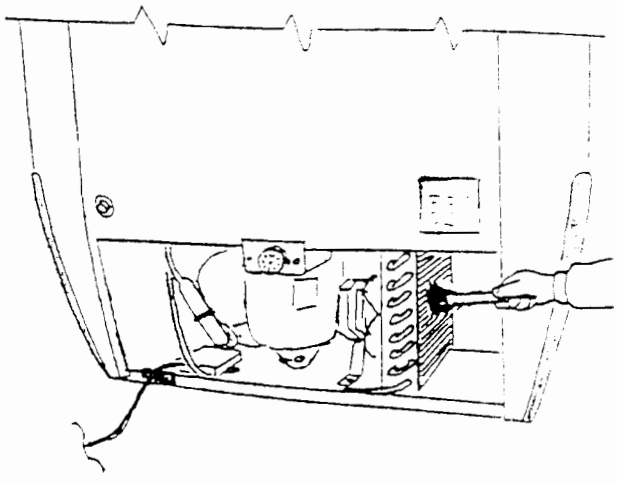

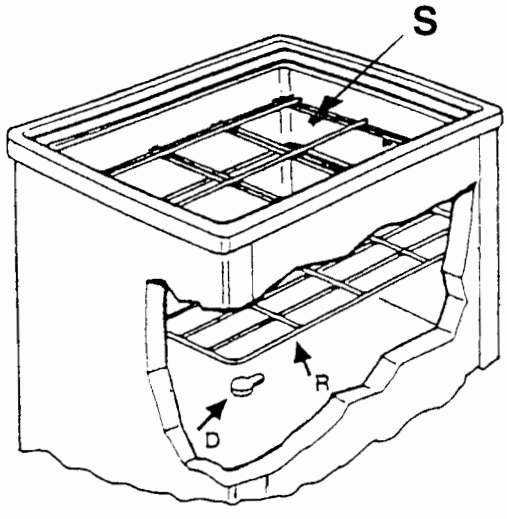

Fig. 4

Mod.	Serial N.	Prod.
TENSIONE / ALIMENTATION Volt	Hz	Fase
POT. NOMINALE / NOMINAL POWER		W
POT. SBRINAMENTO / DEFROST POWER		W
POT. LAMPADE / LIGHTS POWER		W
REFRIGERANT (Y)		
REFRIGERANT (X)		
CAPACITA' / CAPACITY		
CLASSE CLIMATICA / CLASS		
TESTED 31 bar		Made in Italy

SCHEMA MONTAGGIO CAMPANA
CANOPY ASSEMBLING

1	MORSETTO A TRE VIE 3 WAYS CLAMP
2	BOCCOLA IN P.V.C. P.V.C. BUSH
3	VITE 4 MA x 15 SCREW 4 MA x 15

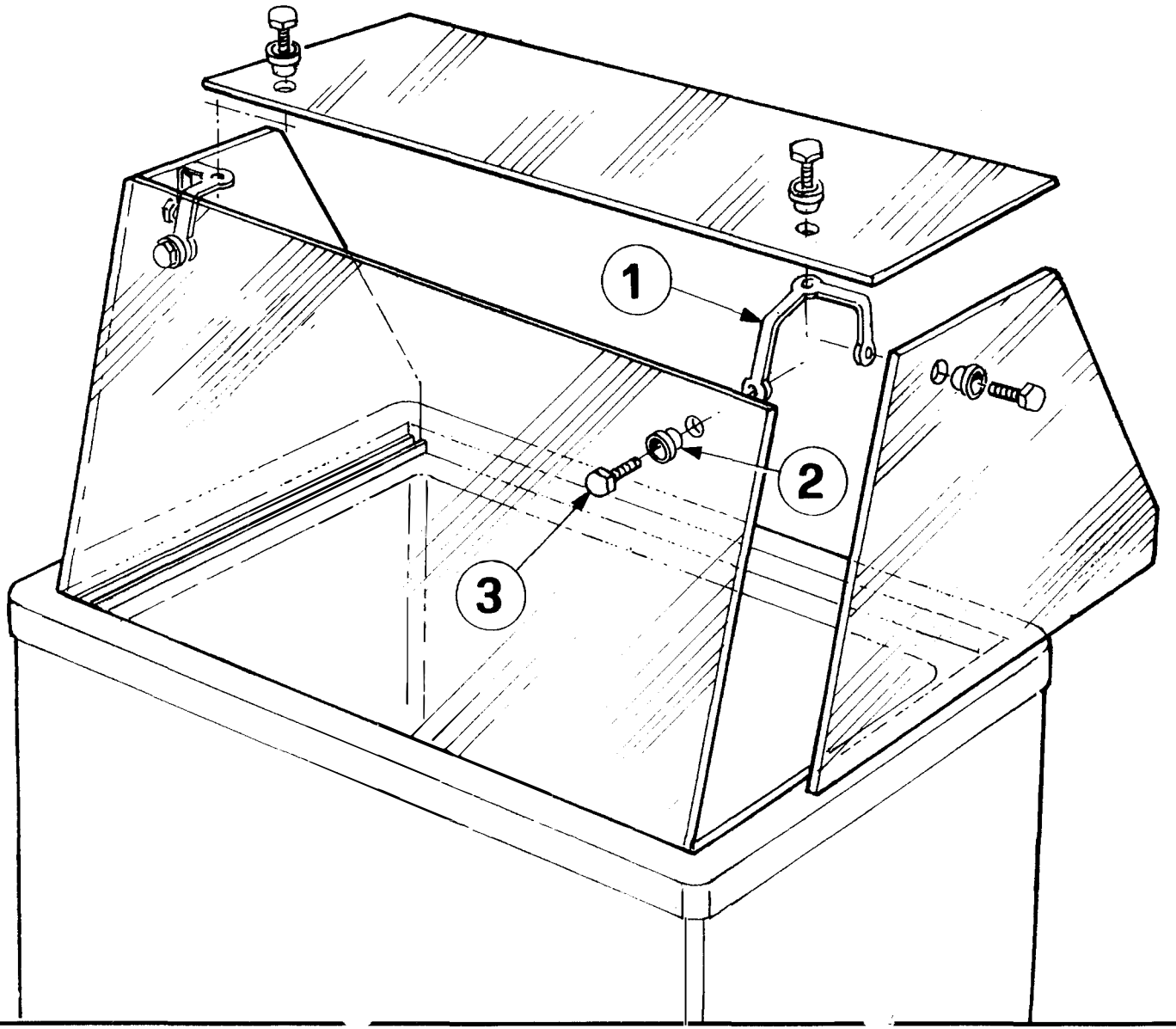

BRIOICE-R2