MOD : BRIOICE-R2

Production code : BRIO ICE 4 SK_

10/2026

Technical Data Sheet

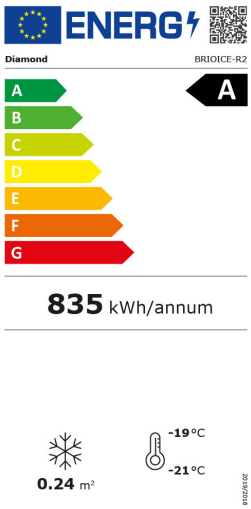



Model : BRIOICE-R2

Temperature	-18°C -25°C
Voltage and Frequency	230 V~ 50 Hz
Gas	R290
Net dimension	780 x 640 x 1181 mm (l x p x h)
Packed dimension (disassembled glass canopy)	830 x 690 x 920 mm (w x d x h)
Gross capacity	170 l
Net capacity	136 l
Gross weight	63.00 Kg
Net weight	46.80 Kg
Heat insulation	Rigid polyurethane foam "HCFC/CFC/HFC" free
External cabinet	White prepainted steel sheet
Cabinet bottom	Galvanized steel sheet
Inner tank	White prepainted non-toxic steel sheet
Frame	plasticized
Glass	Upper glazed cabinet fixed and 2 insulating slinding glasses
Back grid - colour	White plasticised non-toxic steel rod
Compressor	1/5 HP
absorbed power	150 W
Power consumption (24h)	2,2 kWh/24h
Condensator	Skin condenser + Fan assisted precondenser
Evaporator	Static evaporator wrapping the tank
Defrosting	Manual
Climatic class	5 (+40°C-40%RH) L1
Plug	European - Angular Plug
Thermometer	Mechanical
Thermostat	Mechanical
Standard equipment	1 basket for 4 containers (5 liters) - 4 one way rollers
Optional	Stainless steel containers 5L- Portions-washing - wheels
Brand	DIAMOND
Producer	DIAMOND

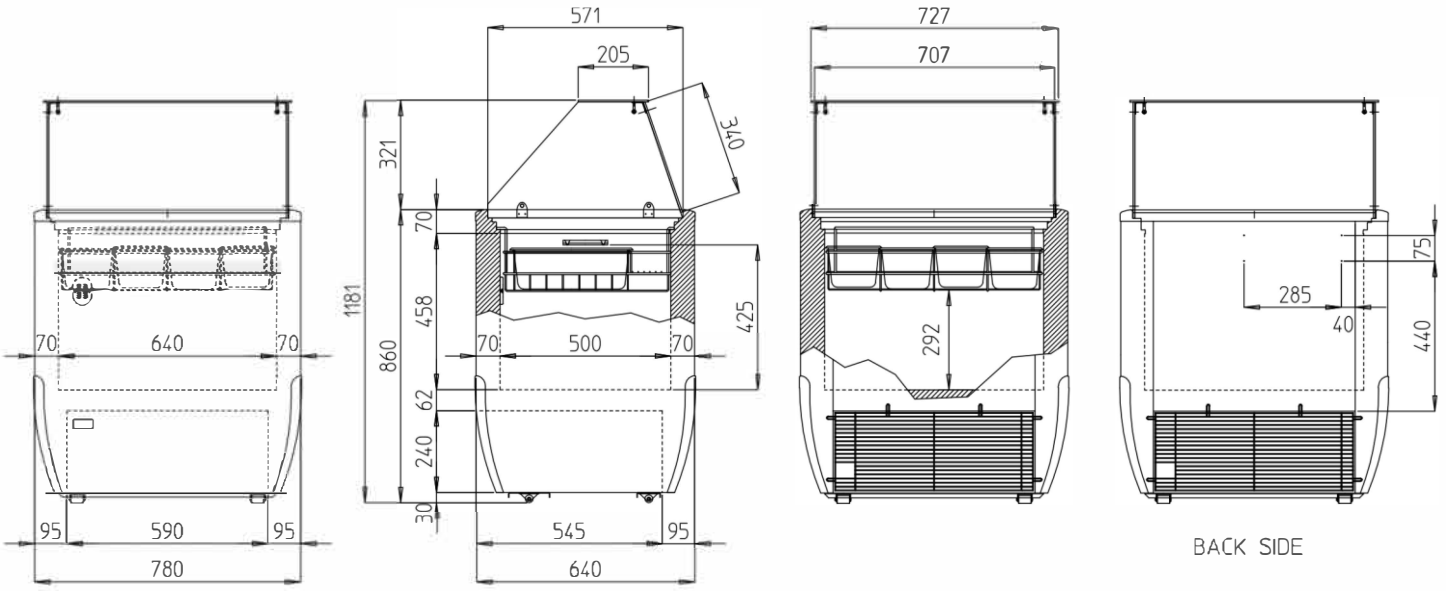
571
205
340
321
70
458
62
240
30
1181
860
425
70
500
70
545
95
640
70
640
70
95
590
95
780
727
707
292
285
40
75
440
BACK SIDE

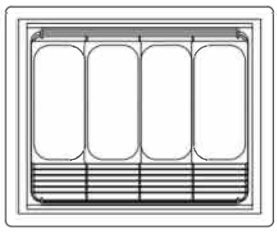

FRONT SIDE