Diamond

MOD : BRIOICE-R2

Production code : BRIO ICE 4 SK_

10/2026

Spare parts list

Ref.	Description	Code
1	CAP CLOSING DRAINAGE WHITE	1721037
2	EST.-INT.PAIR INS. BRIO 180	3420499115024
3	COMP.NUT55CAD 220-240V 50HZ RSCR R290	4106156
4	ACC.SET NUT55CAD 220-240V 50HZ RSCR R290	1147619
5	SUCTION LINE	8971255
6	FILTER XH9 ENTRY 5 OUT 2.75 GR20	3141032
7	THERMOSTAT DANFOSS 077	4100400001307
8	THERMOSTAT KNOB WITH NUMBER CHEF P-CGR ->	1721768
9	THERMOSTAT HOLDER C.SLANT	2222041209000
10	UNI-DIRECTIONAL ROLLER D.23	5591003
11	THERMOM.-THERMOSTAT BULB-COVER VS-VT/E WHITE	3420499412000
12	RECTANGULAR THERMOMETER CAPIL.L=2000 BULB D.6,5	4100500015000
13	LOWER FLAT GLASS BRIO 180 H.G.	4601921110000
14	UPPER FLAT GLASS BRIO 180 H.G.	4601921109000
16	SIDE COVER GLASS	1751346
17	FRONT COVER GLASS	1751347
18	UPPER COVER GLASS	1751348
19	CANOPY SCREW SET	9902163F
20	MOTOR HOUSING WIRE GRID CICLOP	4420345659000
21	BASKET FOR BRIO ICE WITHHANDLE	4420343236000

* Price list without VAT. The prices of the accessories set are to be considered only if they are sold with the relevant compressors

The manufacturer will reserve the right to make any modification without prior notice.

Updated on
20/05/2020

Spare parts drawing

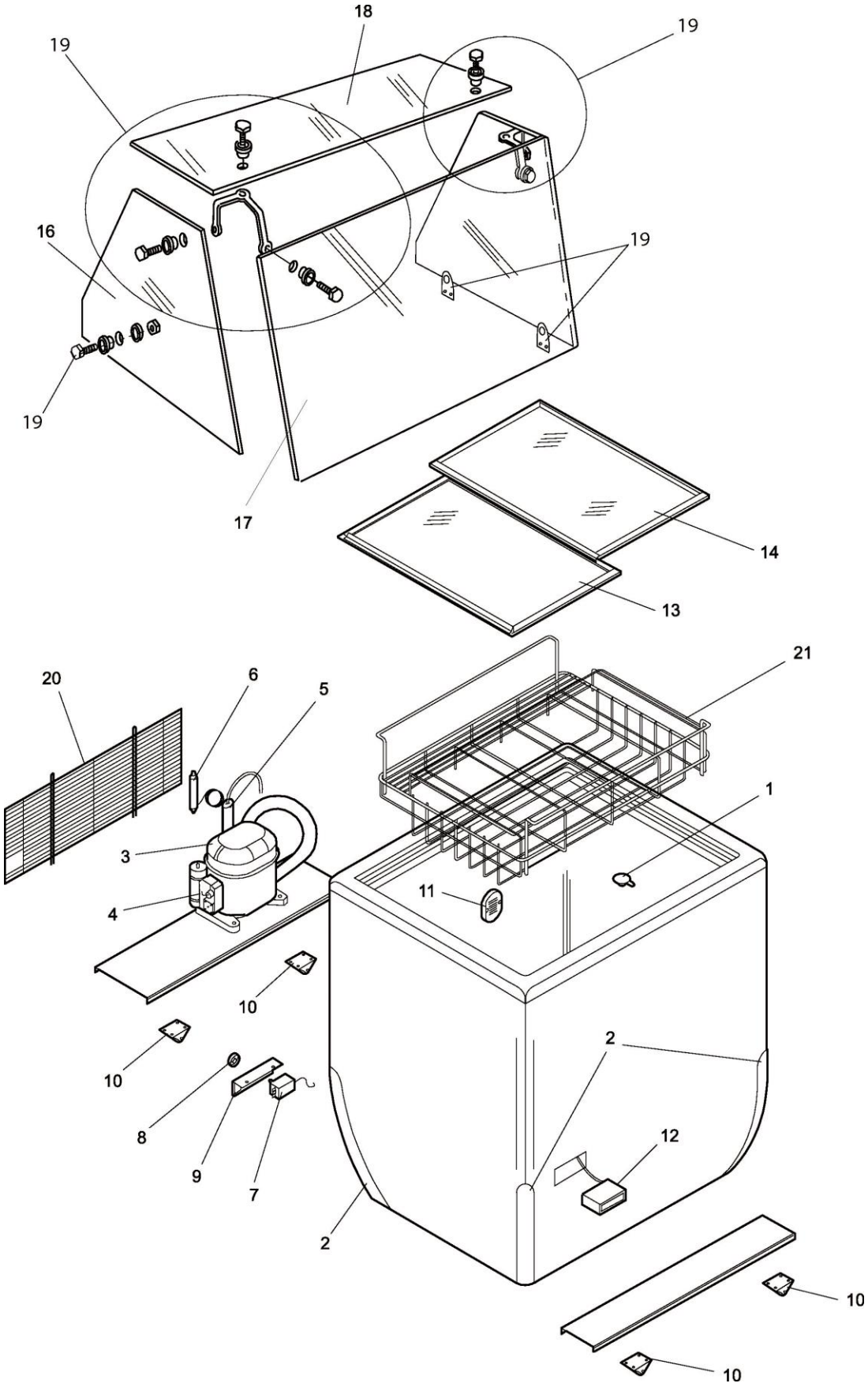

Updated on
20/05/2020