# MOD : BIG-EXPO/LUX-R2

**Production code : SLANT 510 ICE LUX_**

**10/2026**

# ENGLISH

*Thank you for choosing one of our products. Your investment is valuable and we are sure that our equipment will prove it. Our product has been designed accurately, in order to provide the best performance and the utmost safety and protection of the environment. During the production process, several test and strict checks have been carried out successfully.*

**FOLLOW THE INSTRUCTION CAREFULLY TO AVOID RISKS FOR THE OPERATOR, DAMAGE TO THE EQUIPMENT OR JEOPARDISING THE PERFORMANCE. OUR COMPANY CAN NOT BE HELD LIABLE FOR TAMPERING WITH OR MODIFICATIONS APPLIED TO THE EQUIPMENT (ADDITION OR ELIMINATION OF ELECTRICAL OR MECHANICAL PARTS) OR DISREGARD OF INSTRUCTIONS CONTAINED THEREIN.**

# INSTALLATION and WARNING NOTES



**CAUTION**
**THIS SYMBOL INDICATES THAT ONLY AUTHORISED AND TRAINED TECHNICIANS SHALL CARRY OUT THE OPERATION:**
Trained and skilled operator, aware of risks involved and responsible of adopting all measures necessary to minimise any possible damage to himself and other people.

1. Remove the packaging from the equipment.
2. Check that the equipment has not been damaged during the transport.
3. Remove the wood pallet and use the plugs to close the fastening holes of the equipment squares.
4. Clean up the equipment (inside/outside) as specified in PERIODIC MAINTENANCE.
5. Do not place the equipment outdoor and exposed to bad weather conditions: the external environmental conditions for proper equipment operations are specified in the TECHNICAL DATA plate situated in the equipment rear side.
6. Put the equipment on a flat surface; for proper operation, the equipment shall be perfectly levelled: for this purpose, use the adjustable feet.
7. Put the equipment in a ventilated place, far from heating sources (heaters, kitchens) and protected from sum beams. For the installation area lighting, the use of fluorescent lights is recommended.
8. Leave a space of 10 cm from walls.
9. Do not leave objects on the equipment, such as containers, plants, etc. and leave at least 50 cm of free space above the equipment.
10. The equipment can be equipped with a lock for the door closing (optional). In this latest case, keep the lock keys out of reach of children.
11. Put hooks and shelves (ventilated chillers and freezers) into position.
12. Do not touch the operating equipment with bare feet or wet hands.
13. The use of this equipment by children or people with physical, sensorial, mental or motion disability, or people who do not have the necessary knowledge and experience, could lead to dangerous situations. The people responsible for their safety should give them explicit instructions or check the use of this equipment;
14. Make sure that children do not play with the equipment.



**CAUTION**
**DO NOT MOISTEN ANY PART OF THE BOX CONTAINING ELECTRIC ELEMENTS.**
**DO NOT FORCE ANY PART CONTAINING COMPONENTS OF THE REFRIGERATING CIRCUIT.**
**DO NOT INSTALL THE EQUIPMENT IN ATMOSPHERES SUBJECT TO RISK OF FIRE OR EXPLOSION, OR RAYS.**

**CONNECTION TO THE ELECTRIC MAINS**

Check that the real mains voltage corresponds to the one specified in the technical data plate.
The power supply line/input for the refrigerator connection shall be properly protected and connected to the main earthing system, according to the regulations in force (e.g. high-sensitivity magneto-thermal differential switch In = 16 A , Id = 30 mA).



**THE EQUIPMENT EARTHING SYSTEM IS A SAFETY STANDARD REQUESTED BY THE LAW. OUR COMPANY HAS ARRANGED THIS CONNECTION, ACCORDING TO THE REGULATIONS IN FORCE; THEREFORE, THE COMPANY CAN NOT BE HELD LIABLE IN CASE OF DAMAGE TO PEOPLE AND PROPERTY.**

Do not use reducing devices, multiple plugs or cable extensions; ensure that the electric installation and power supply plug capacity comply with the regulations in force and they are indicated for the equipment power, according to the data specified in the plate. In case of doubt, for the purpose of periodic check of general safety of equipment and users, contact only qualified and professional technicians.

# ENVIRONMENTAL CONDITIONS

In order to keep the ambient climate in the installation place within the limits established in the technical data plate it can be necessary to install an air conditioning system. Such system should control the relative humidity, as excessive humidity affects the good equipment operation.
The position of the box should limit or avoid the air flows. Do not install the box close to doors or areas exposed to strong air flows, such as, for example, conditioning system, ventilation or heating openings.

# COMMISSIONING

The crated cabinet has a wooden board suitable for lifting by fork lifts or transpallets (Picture 1).
The packing stuff (plastic bags, nails, screws, polystyrene, etc.) must not be kept within children's reach because it could be dangerous.

MODELS 150 – 200 – 250
Remove the A screws which fasten the board to the cabinet. (Picture 2).
Screw and adjust the B feet in the special supports (Picture 2).

Remove the screws A (one foe each side) which fix the board to the cabinet.
(Picture 3)

Before connecting the machine to the power supply plug, leave the machine in stop position for at least 1 hour. In case the machine has been transported in horizontal position, leave it in stop position for at least 24 hours.

After connection, operate the equipment empty for at least two hours with lights switched off, then proceed and load the products, paying attention not to put them beyond the shelf edges, as beyond the front part of the shelf, the temperature is not sufficient for proper conservation, while on the rear part, the products obstruct the good circulation of the cooled air.

THE PRODUCT POSITION INSIDE THE EQUIPMENT SHALL NEVER EXCEED THE MAX LOADING LEVEL OF THE TANK (RED LINES).

DO NOT STORE MEDICAMENTS OR DRUGS OR SIMILAR PRODUCTS.

DO NOT STORE IN THE EQUIPMENT SMOKED PRODUCTS OR PRODUCTS CONTAINING VINEGAR OR HOT PEPPERS, AS THEY CAN DAMAGE THE EVAPORATOR COPPER PARTS.

PUT THE PRODUCT IN THE EQUIPMENT ALREADY AT STORAGE TEMPERATURE;
FROZEN PRODUCTS SHALL BE PUT IN THE EQUIPMENT AT A STORAGE TEMPERATURE NOT HIGHER THAN -18°C, EXCEPT FOR SHORT ADMITTED PERIODS AT -15°C;

# ACCESSORIES

Use exclusively the accessories supplied with the box. Any other "self-service" added equipment can affect the regular air circulation and cause improper operation of the equipment.

# SUGGESTIONS FOR THE ENVIRONMENTAL PROTECTION

**Packaging**

The packaging material is 100% recyclable and is marked with the symbol of recycling. For disposal, follow the local regulations. The packaging material (plastic bags, parts in polystyrene, etc.) must be kept out of reach of children, as it is potential source of hazard.



**Product**

This equipment is marked in compliance with the European Directive 2002/96/EC, Waste Electrical and Electronic Equipment (WEEE). Make sure that this product is properly disposed, in order to give your contribution to prevention of any possible negative consequences for the atmosphere and the health. The symbol on the product or the documentation indicates that this product does not have to be disposed like domestic waste, but it must be delivered to the suitable collection point for recycling of electronic and electric equipment. For further information on disposal, recovery and recycling of this product, contact the suitable local office, the city waste collection service or the distributor from which the product has been purchased or obtained.

# PERIODIC MAINTENANCE

Before every intervention, the user has to disconnect the power supply plug. The refrigerator mechanical parts do not need any periodic maintenance, but for a long-lasting life of the equipment, periodic cleaning is fundamental:

- **EXTERNAL BOX:** just clean it up with a dry soft cloth, in case of resistant spots, use lukewarm water and neutral detergents, then rinse well and dry.
- **PARTS IN STEEL:** wash with lukewarm water and neutral soaps, dry with a soft cloth, do not use steel wool, as it can damage the surface.
- **PARTS IN PLASTICS**: wash with water and neutral soaps. Rinse well and dry with a soft cloth, do not use alcohol, acetone and other solvents, as they can damage the surface permanently.
- **PARTS IN GLASS**: use only specific products, do not use water, as it can build limestone on the glass surface.

For the tank cleaning, proceed as follows:

1. **Switch off the equipment and disconnect the plug from power supply.**
2. **Take the products and the shelf out of the tank.**
3. **Leave the door open and wait until the tank temperature corresponds to the outside temperature.**
4. **Wash and dry the internal tank with a cloth and neutral detergent.**
5. **Do not use water jets for cleaning, as they can damage the electric parts.**

Then, put the shelves back to their position and connect the equipment; after one hour of operation with lights switched off, load the products.

Once per year, clean up the door gaskets with neutral soap and warm water. Rinse and dry; a light layer of Vaseline should be applied in order to keep the gaskets soft and flexible.
**For this operation, do not use sharp and pointed objects that could damage the gaskets.**

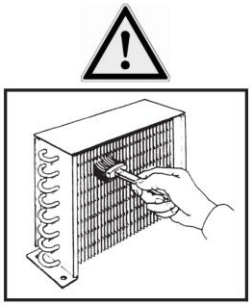

**FINNED CONDENSER CLEANING (every month)**

Caution: only specialised technicians shall carry out the operation described below.

Periodically check and remove from the finned condenser unit (if present) the impurity (dust and deposit) wich remain among the fins of the condenser, obstructing a good circulation of the air. A dirty condenser reduces the performance of the equipment, increasing the energy consumption. Cleaning should be carried out with a soft brush or preferably with a vacuum cleaner.

**MANUAL DEFROSTING – FOR EQUIPMENT WITHOUT AUTOMATIC DEFROSTING**

1. Disconnect the plug from power supply;
2. Move the products to another equipment, if possible; otherwise, put the products into a box and wrap the box with a blanket, to accelerate the defrosting operation;
3. Remove the plug from the tank bottom (if present);
4. Accelerate the water evacuation with a plastic scraper or a sponge moistened with warm water;
5. Dry the tank with a cloth;
6. Put the plug back into position in the tank bottom and connect the plug to power supply;
7. Wait until the equipment has reached its operating temperature before putting the products back to the refrigerator.

# PROBLEMS and REMEDIES

**The equipment does not work**:
- Check that power is properly supplied through the plug;
- Check that the plug is properly inserted in the socket;

**Internal temperature is not cold enough, check that**:
- The products or other objects do not obstruct the proper door closing;
- The equipment is not close to any heating source;
- The equipment leans on the wall and the front grid is free;
- The door is well closed;
- The thermostat is properly into position;
- The condenser is not obstructed or clogged; for cleaning, use a bristle brush or a vacuum cleaner;

**The equipment is noisy, check that:**
- All screws and nuts are properly tightened;
- Any pipe or blade is not in contact with one part of the equipment;
- The equipment is well levelled;

**Condensation forms in the refrigerator:**
- This is normal when humidity is high;
- Part of this humidity is normal in the areas where products are not wrapped in paper or contained in open containers;
- Frequent or prolonged opening of the doors is the cause of condensation in the refrigerator; Check that doors are properly closed.

**IN CASE OF PERSISTENT PROBLEMS, CONTACT THE AFTER-SALES SERVICE NEAREST TO YOU**

**IN CASE THE SUPPLY CABLE IS DAMAGED, THE MANUFACTURER OR THE AFTER-SALES SERVICE, OR QUALIFIED TECHNICIAN SHALL REPLACE IT, IN ORDER TO PREVENT ANY POSSIBLE RISK.**

**THE LAMP REPAIR AND REPLACEMENT SHALL BE CARRIED OUT BY QUALIFIED TECHNICIANS, WITH POWER SUPPLY DISCONNECTED. REPLACE WITH IDENTICAL LAMPS.**

**ONLY QUALIFIED TECHNICIANS SHALL CARRY OUT THE EXTRAORDINARY MAINTENANCE INTERVENTIONS.**

# CONTROLS

**QUICK FROSTING SWITCHER** (if present): to use it press the orange switcher that once lightened make the compressor continuously working .

**ALARM SPOT LIGHT** (if present): its red and, if on, means that the Temperature inside the unit is not cold enough and this could be for the following reasons:

- The unit has just been started
- The door has been open or not properly closed
- It has just been putted in a food stuff to be frozen

After about 15-20 minutes when the unit will reach the right set temperature the light will get off automatically.

**ON LINE SPOT LIGHT** (if present): it's green, and it shows that the unit is perfectly connected to the electric feeding line.

**TEMPERATURE GAUGE**: the temperature inside the cabinet in different models can be indicated by a thermometer, or an electronic thermostat that also allows its adjustment. In the last case please follow specific instructions included in thermostat instruction booklet.

**ELECTRIC LINE SWITCH** (if present) **:** it allows to turn on and off the appliance after plugging in the wall outlet.

**INNER VENTILATION SWITCH** (if present): connects or disconnects the fan inside the tank. For a proper functioning of the cabinet, keep the fan always working except in case of too long door opening (i.e. in case of products storage).

**THERMOSTAT KNOB** (if present): it is foreseen if there isn't an electronic thermostat. To achieve an optimum conservation, it must be set in a medium position. To achieve a warmer temperature, turn the thermostat knob anticlockwise, that is toward the lower numbers, while to obtain a colder temperature turn it toward the higher numbers.

**ELECTRONIC THERMOSTAT (DIGITAL)** (if present): please consult the papers (thermostat instruction booklet) you'll find inside the cabinet.

**LIGHT SWITCH** (if present): it allows to switch the lights on and off, with the symbol (II) it switches on the lights in the cabinet, with the symbol (I) it switches on the lights in the bin;

**DEFROSTING TIMER** (if present): it is used to program the defrosting (duration, number of interventions).

Fig. 1

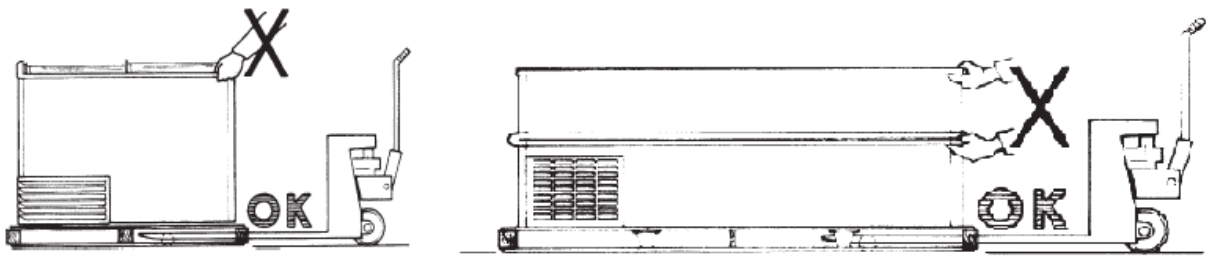


Fig.2

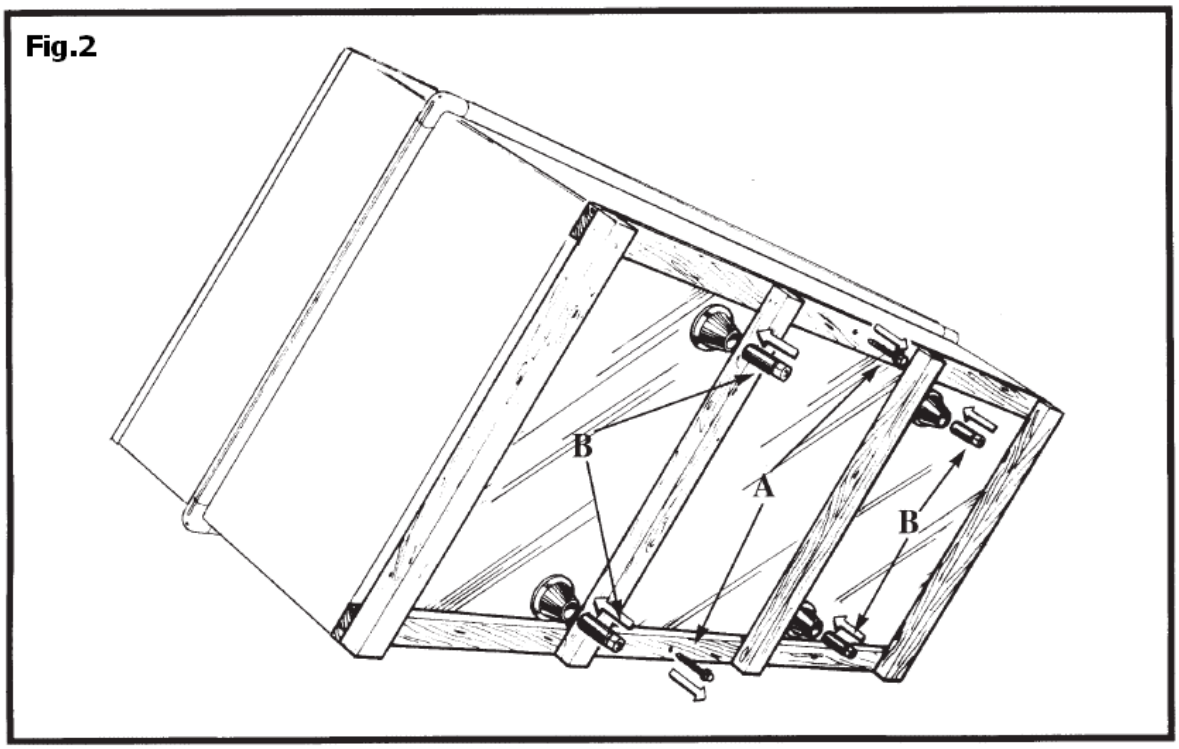


Fig. 3

