MOD : LFD-08-LX

Production code : P010212DIA.KR

03/2025

INSTALLATION, OPERATING AND MAINTENANCE MANUAL: ELECTRIC OVEN WITH ANALOG, DIGITAL AND TOUCH CONTROL

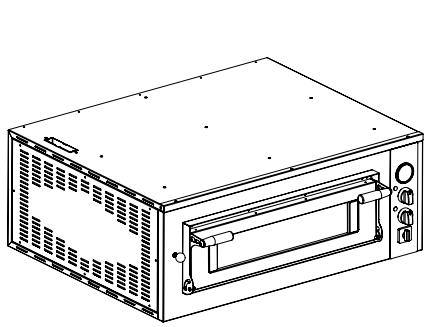
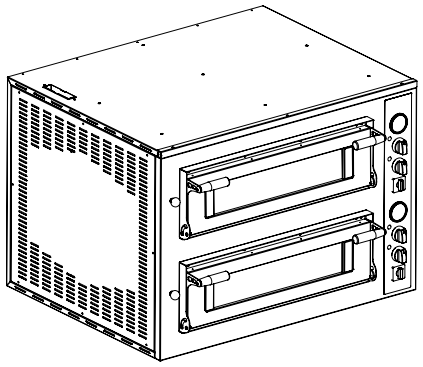
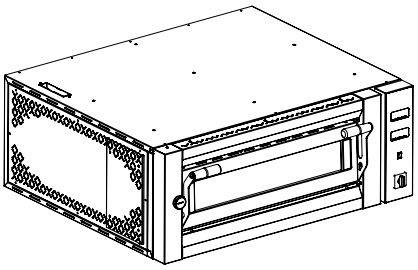
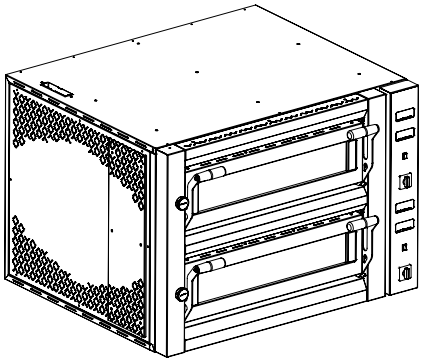
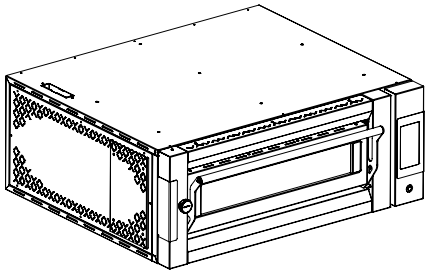
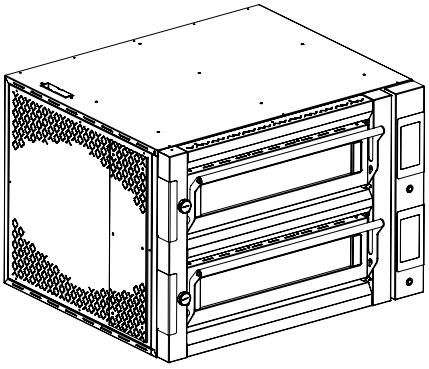

EN Installation, operating and maintenance manual 19

** Original instructions*

Table of contents

1. WARNINGS 20
   1.1 Appliance description 20
   1.2 Transportation and handling 21
   1.3 Operating conditions and technical specifications 21
   1.4 Installation 21
   1.5 Electrical connections 22
   1.6 Reasonably foreseeable misuse 22
   1.7 Operation/use 22
   1.8 Total shutdown 23
   1.9 Routine cleaning and maintnance 23
   1.10 Unplanned maintenance 23
   1.11 Disposal 24
2. INTRODUCTION 25
3. APPLIANCE DESCRIPTION 25
4. TRANSPORTATION AND HANDLING 25
5. OPERATING CONDITIONS AND TECHNICAL SPECIFICATIONS 26
   5.1 Rating plate 26
   5.2 Commands and controls 26
6. INSTALLATION 27
   6.1 Controlling the appliance upon receipt 27
   6.2 Positioning 27
   6.3 Preparations to be made by the client 27
   6.4 Electrical connections 27
7. OPERATION/USE 28
   7.1 Intended use and restrictions 28
   7.2 Switching on the oven for the first time 28
   7.3 Start up phase 28
   7.4 Digital thermostat 28
   7.5 Touch Control 29
   7.6 Total shutdown 33
8. CLEANING AND MAINTENANCE 33
   8.1 Routine maintenance 33
   8.2 Unplanned maintenance 33
   8.3 Possible malfunctions 33
9. DISPOSAL 34
10. ATTACHED DOCUMENTATION 34
11. TECHNICAL FEATURES 68
   11.1 OVEN WITH ANALOG CONTROL 68
   11.2 OVEN WITH DIGITAL CONTROL 70
   11.3 OVEN WITH TOUCH CONTROL 72

CE

INSTALLATION, OPERATING AND MAINTENANCE MANUAL:
ELECTRIC OVEN WITH ANALOG, DIGITAL AND TOUCH CONTROL

1. WARNINGS

The contents of this manual are generic and not all the functions described may be available on your product. The manufacturer declines all responsibility for possible inaccuracies contained in this pamphlet, due to printing or copy errors. We reserve the right to make on our own products those changes to be considered necessary or useful, without jeopardizing the essential characteristics.

Read this manual carefully before commencing installation.
The manual has been designed to provide the user with all the information required to use the appliance safely, from its transportation right through to its disposal. In order to properly understand the document, you must be familiar with the terms and symbols used; these are summarised below:

 WARNING – Health and safety hazard for the persons involved

 WARNING - Electrical hazard - Dangerous voltage

 Read the instruction manual before using the appliance.

The manual must be stored carefully so that it can be used for future reference. If the appliance changes hands, the manual must also be handed over to the new user.
This documentation is also made available by the manufacturer in digital format.

In order to use the appliance correctly:
- Do not remove or tamper with the safety devices;
- It is prohibited to perform any checks, cleaning operations or maintenance works on moving parts;
- Only use the appliance for the purposes for which it was specifically designed;
- Keep unauthorised personnel away from the appliance;
- It is prohibited for people under the age of 18 or adults with limited physical or mental abilities to use the appliance;
- Have maintenance performed exclusively by qualified personnel;
- Switch off the appliance in the event of a fault or malfunction;
- Disconnect the equipment when cleaning the machinery;
- Only use the spare parts supplied or indicated by the Manufacturer;
- Ensure that the installation site is dry;
- Keep any heat or water sources away;
- Ensure proper lighting and ventilation according to legal regulations;

 Attention: only qualified personnel are authorised to access the main control board and any other electrical parts, whether for installation or maintenance purposes.

The Manufacturer declines all responsibility for damage to property or bodily injury caused by the failure to follow the instructions and warnings contained in the manual.
If in any doubt, and whenever the need arises, contact the Dealer.

1.1 Appliance description

Our ELECTRIC OVENS consist of a refractory stone bottom that ensure a uniform and homogeneous cooking and a steel structure available in different finishes.
The adjustment of the outgoing fumes is provided by a special knob located on the front of the machine. The

maximum operating temperature is 450°C. The control panel placed on the front is equipped with an analog or digital thermoregulator.

The equipment conforms to the 2014/35/UE, 2014/30/UE ed 1935/2004/CE
In addition, the following standards have also been applied: EN 60335-1, EN 60335-2-36, EN 61000-3-2, EN 61000-3-3, EN 55014.1 ed EN 55014.2.

1.2 Transportation and handling

⚠ If the appliance is transported on a pallet, it must be unloaded by trained personnel using a forklift or other suitable lifting equipment. During loading and unloading operations, it is prohibited to stand under suspended loads. Any manoeuvring errors could cause crushing injuries.

Any blows to the surfaces of the appliance could result in immediate damage.
During this phase, anyone not directly involved in the operation must not be allowed to remain in the area.
The personnel handling, positioning, assembling or disassembling the appliance, must be qualified and wearing suitable personal protective equipment (e.g. work gloves, safety shoes).

1.3 Operating conditions and technical specifications

The equipment covered by this manual is designed solely for baking pizzas and its by-products. The maximum operating temperature of the machine is around 450°C, but may vary depending on the environmental conditions in which the machine is located.

⚠ Warning: the appliances are not suitable for outdoor installations and/or environments subjected to the weather (rain, direct sunlight, etc.).

⚠ Warning: do not store explosive substances such as pressurised containers or items containing a flammable propellent inside these appliances.

⚠ Warning: before installing the appliance, make sure that the electrical connection preparations comply with the information indicated on the rating plate. It is prohibited to remove or modify the rating plate or any other warning label.

1.4 Installation

Before unpacking the appliance, check that the outer protective casing is fully intact.
Any damage must be promptly reported to the courier. In any case, no damaged appliance can be returned to the manufacturer without prior notice and without prior written authorisation.

⚠ The described operations must be carried out by qualified personnel. Before performing any installation procedure, disconnect the appliance from the power mains.

Set down the appliance where desired using a pallet truck. If the unit is moved after it has been unpacked, protect the surfaces from knocks. Once the installation has been carried out, the protective film can be removed. This operation should be performed very slowly to prevent the glue from remaining on the surfaces.

Use an earthed socket with an adequate capacity for the absorption indicated on the rating plate.

The equipment is supplied WITHOUT power cable. Connection to the mains supply must be carried out by qualified personnel.

Before installing the appliance, check the load-bearing capacity and flatness of the surface on which it is to be placed. Incorrect levelling can cause the appliance to malfunction.

1.5 Electrical connections

They must be carried out in accordance with the local regulations in force. Before performing the electrical connection, make sure that the voltage and frequency correspond to the information indicated on the appliance's rating plate. The electrical connection is carried out by connecting the appliance's plug to a socket in the room; this socket must still remain accessible after the installation.
The distance between the oven and the socket must be such that the power cable is not stretched. Furthermore, the cable must not be located under the base of the oven.

The equipment's electrical circuit is designed to operate with a power supply voltage according to the configurations shown in the Tables in chapter 11, with a frequency of 50/60Hz. See wiring diagram Fig. 2 referring to the model purchased.

The electrical connection is made by connecting a cable to the equipment's terminal block by removing the right side panel with the appropriate tools.

Use cable type H07RNF or equivalent and an efficient and correctly sized earth conductor according to the total power of this appliance (see rating plate).

If the power cable is damaged, it must be replaced by the customer service or qualified personnel.
The appliance's electrical supply system must be equipped upstream with an appropriately-sized automatic omnipolar circuit breaker that ensures a gap of at least 3 mm between the contacts. There must not be any breaks in the earth cable.

The electrical safety of this appliance is only guaranteed when the above-mentioned conditions are met and if the system's equipotential situation is also compliant (use the connection screw located near the power cable input and the symbol sticker ⏚).

Any operations carried out on electrical systems must be performed by qualified personnel. The manufacturer declines all responsibility in the event that these safety standards are not complied with.

1.6 Reasonably foreseeable misuse

Any use other than what is specified in this manual is considered improper. When using the machine, work or activities that may pose risks to the safety of the workers or cause damage to the appliance are not permitted.
Improper use includes:

- Placing the appliance in a weather-exposed outdoor area.
- Incorrectly installing the machine.
- Changing or tampering with the safety devices.
- Making changes or tampering with the appliance's electronic elements.
- Not complying with the deadlines for periodic checks, maintenance and cleaning.
- Placing or storing flammable or explosive materials in the immediate vicinity of the machine.

1.7 Operation/use

- Before using the equipment, clean the inside with a special brush until the working surface is clean and free from encrustations. We recommend cleaning the steel parts with a neutral detergent and a damp cloth. Avoid using abrasive detergents or scouring powders. The manufacturer declines all

responsibility if the products are not used as intended.
- When the oven is working (main switch in position “1”), set the thermostats to the desired temperature. The light indicates that the heating elements are on. When the temperature is reached, the indicator light will turn off.
- The equipment covered by this manual is designed solely for baking pizzas and its by-products. Any other use shall be considered improper.
- The machines have not been designed for use in unsupervised environments. Furthermore, the appliances are not suitable for outdoor installations and/or environments subjected to the weather (rain, direct sunlight, etc.).
- Do not store explosive substances such as pressurised containers or items containing a flammable propellent.

1.8 Total shutdown

When the unit is to be decommissioned for a lengthy period, the following measures must be taken:
- switch off the equipment by turning the main switch to the ‘0’ position;
- disconnect the upstream power supply;
- empty the baking chamber and thoroughly clean the stone bottom;
- protect the stainless steel surfaces by covering them with Vaseline oil, rubbing vigorously with a cloth soaked in the oil;

1.9 Routine cleaning and maintnance

The appliance must only be cleaned after the power supply upstream from the appliance has been disconnected.
During the maintenance operations, the cable and the plug must be always visible and accessible for the operator who is performing the operations.
The routine and preventive maintenance essentially entails cleaning the stainless steel parts with warm water and mild soap on a weekly basis, and then rinsing and drying these thoroughly.
After each use of the machine is recommended to clean the refractory stone bottom using a special brush to remove any food residue. Do not use direct jets of water. We recommend cleaning the fins of the refrigerating unit’s condenser at least every three months. These operations must be performed by qualified personnel.

WARNING:
- Under no circumstances should you use abrasive or corrosive cleaning products.
- Bleach, hydrochloric acid and other compounds containing chlorine will damage the stainless steel.
- When cleaning, do not wash the appliance with jets of water.
- It is forbidden to remove the safety guards.
- Smoking is prohibited.

1.10 Unplanned maintenance

Before carrying out any maintenance work, put the appliance in a safe condition. Unplanned maintenance is carried out in the event of a fault or malfunction. It must only be performed by qualified personnel and with the appliance disconnected from the power mains. In this case, repairs or replacements might be required. The faulty parts must only be replaced with materials and components that are identical to the originals or have been specified by the Supplier. The use of unsuitable materials can make the machine non-compliant with the safety standards. The manufacturer declines all responsibility for damage resulting from work carried out by unqualified or unauthorised technicians.
If the user replaces components or modifies the appliance without written permission from the Manufacturer, or uses unauthorised spare parts, the guarantee will immediately become null and void.

1.11 Disposal

At the end of its service life, the appliance must be disconnected from the power mains before the various components are disassembled. Special care must be taken to avoid the risk of injury related to the shape and weight of each component.

This appliance is marked according to the European directive 2012/19/UE on Waste Electrical and Electronic Equipment (WEEE).



The symbol on the product indicates that it should not be considered as domestic waste. The appliance must be disposed of in accordance with the laws in force, most especially in regards to the disposal of the refrigerant. The various parts (electrical components, rubber hoses, cable sheaths, etc.) must be sorted for recycling in order to make the best possible contribution whilst protecting the environment and complying with the laws in force.

2. INTRODUCTION

Read this manual carefully before commencing installation.
The manual has been designed to provide the user with all the information required to use the appliance safely, from its transportation right through to its disposal. In order to properly understand the document, you must be familiar with the terms and symbols used; these are summarised below:

WARNING – Health and safety hazard for the persons involved

WARNING - Electrical hazard - Dangerous voltage

Read the instruction manual before using the appliance.

The manual must be stored carefully so that it can be used for future reference. If the appliance changes hands, the manual must also be handed over to the new user.
This documentation is also made available by the manufacturer in digital format.

In order to use the appliance correctly:
- Do not remove or tamper with the safety devices;
- It is prohibited to perform any checks, cleaning operations or maintenance works on moving parts;
- Only use the appliance for the purposes for which it was specifically designed;
- Keep unauthorised personnel away from the appliance;
- It is prohibited for people under the age of 18 or adults with limited physical or mental abilities to use the appliance;
- Have maintenance performed exclusively by qualified personnel;
- Switch off the appliance in the event of a fault or malfunction;
- Disconnect the equipment when cleaning the machinery;
- Only use the spare parts supplied or indicated by the Manufacturer;
- Ensure that the installation site is dry;
- Keep any heat or water sources away;
- Ensure proper lighting and ventilation according to legal regulations;

Attention: only qualified personnel are authorised to access the main control board and any other electrical parts, whether for installation or maintenance purposes.

The Manufacturer declines all responsibility for damage to property or bodily injury caused by the failure to follow the instructions and warnings contained in the manual.
If in any doubt, and whenever the need arises, contact the Dealer.

The equipment conforms to the 2014/35/UE, 2014/30/UE ed 1935/2004/CE
In addition, the following standards have also been applied: EN 60335-1, EN 60335-2-36, EN 61000-3-2, EN 61000-3-3, EN 55014.1 ed EN 55014.2

3. APPLIANCE DESCRIPTION

Our electric ovens consist of a refractory stone bottom, ensuring uniform and homogeneous cooking, and a stainless steel body available in different finishes.
The cooking fumes control is guaranteed by a knob in the front side of the oven.
The maximum temperature is about 450°C. The control panel in the front side is equipped with thermostats which can be analogic or digital.

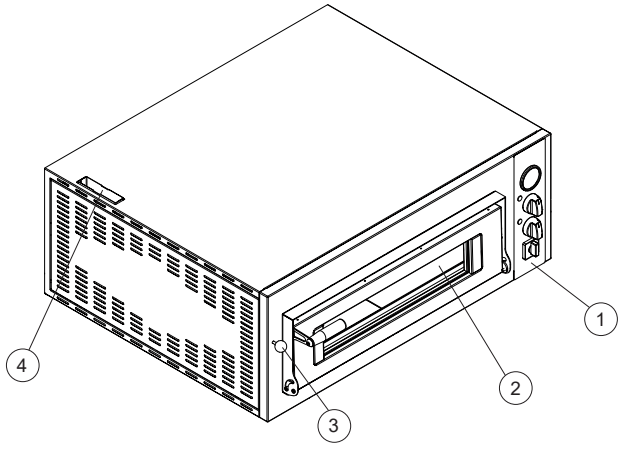

1. Control panel
2. Cooking surface
3. Smoke outlet knob
4. Smoke outlet chimney

4. TRANSPORTATION AND HANDLING

If the appliance is transported on a pallet, it must be unloaded by trained personnel using a forklift or other suitable lifting equipment. During loading and unloading operations, it is prohibited to stand under suspended loads. Any manoeuvring errors could cause crushing injuries.

Any blows to the surfaces of the appliance could result in immediate damage.
During this phase, anyone not directly involved in the operation must not be allowed to remain in the area.
The personnel handling, positioning, assembling or disassembling the appliance, must be qualified and wearing suitable personal protective equipment (e.g. work gloves, safety shoes).

5. OPERATING CONDITIONS AND TECHNICAL SPECIFICATIONS

The equipment covered by this manual is designed solely for baking pizzas and its by-products. Any other use shall be considered improper.

⚠ Warning: the appliances are not suitable for outdoor installations and/or environments subjected to the weather (rain, direct sunlight, etc.).
Warning: do not store explosive substances such as pressurised containers or items containing a flammable propellent inside these appliances.

5.1 Rating plate

The rating plate contains the product's identification and technical data. The information it contains is listed below:

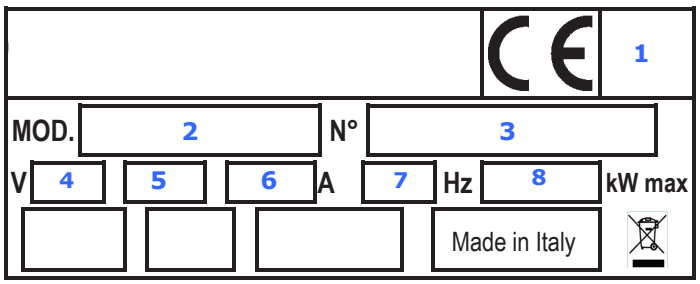

- Manufacturer
- Conformity to EC directives

1. Appliance's year of manufacture
2. Item Model
3. Serial number
4. Electrical data: supply voltage (V)
5. Electrical data: number of phases (~),
6. Electrical data: absorbed current (A)
7. Electrical data: supply frequency (Hz)
8. Electrical data: maximum absorbed power (kW)

⚠ Warning: before installing the appliance, make sure that the electrical connection preparations comply with the information indicated on the rating plate. It is prohibited to remove or modify the rating plate or any other warning label.

5.2 Commands and controls

The control devices are grouped together on the instrument panel illustrated in Fig. 1. Electrical components conform to standards.

Fig. 1

ANALOG CONTROL PANEL
SINGLE CHAMBER

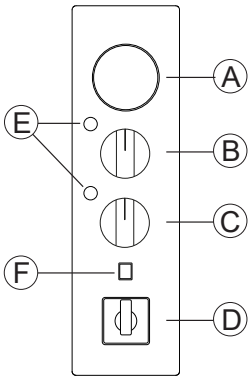

DIGITAL CONTROL PANEL
SINGLE CHAMBER

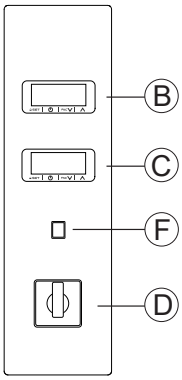

TOUCH CONTROL PANEL
SINGLE CHAMBER

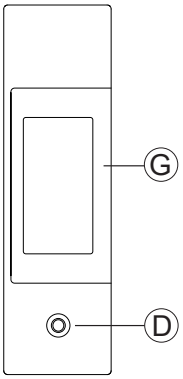

ANALOG CONTROL PANEL
DOUBLE CHAMBER

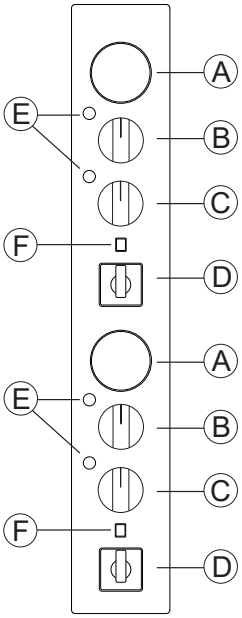

DIGITAL CONTROL PANEL
DOUBLE CHAMBER

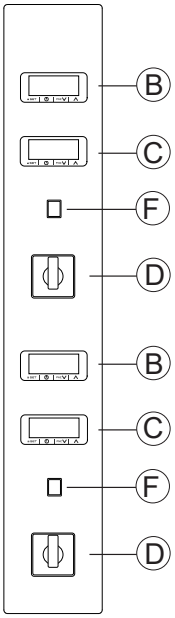

TOUCH CONTROL PANEL
DOUBLE CHAMBER

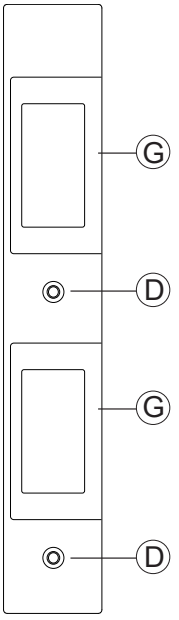

A = ANALOG THERMOMETER

B = TOP THERMOSTAT (ANALOG OR DIGITAL)

C = STONE BOTTOM THERMOSTAT (ANALOG OR DIGITAL)

D = MAIN SWITCH

E = GREEN INDICATOR LIGHT

F = LIGHT SWITCH (AVAILABLE ON SPECIFIC MODELS ONLY)

G = TOUCH CONTROL DISPLAY

6. INSTALLATION

6.1 Controlling the appliance upon receipt

Before unpacking the appliance, check that the outer protective casing is fully intact.
Any damage must be promptly reported to the courier. In any case, no damaged appliance can be returned to the manufacturer without prior notice and without prior written authorisation.

6.2 Positioning

The described operations must be carried out by qualified personnel. Before performing any installation procedure, disconnect the appliance from the power mains.

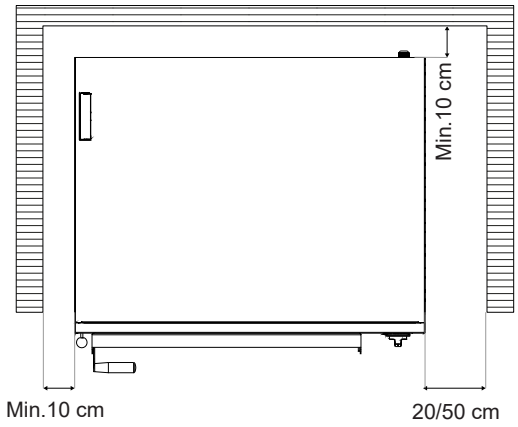

Set down the appliance where desired using a pallet truck.
If the unit is moved after it has been unpacked, protect the surfaces from knocks. Once the installation has been carried out, the protective film can be removed. This operation should be performed very slowly to prevent the glue from remaining on the surfaces.

Before installing the appliance, check the load-bearing capacity and flatness of the surface on which it is to be placed. Incorrect levelling can cause the appliance to malfunction.

6.3 Preparations to be made by the client

Use an earthed socket with an adequate capacity for the absorption indicated on the rating plate.

6.4 Electrical connections

They must be carried out in accordance with the local regulations in force. Before performing the electrical connection, make sure that the voltage and frequency correspond to the information indicated on the appliance's rating plate. The electrical connection is carried out by connecting the appliance's plug to a socket in the room; this socket must still remain accessible after the installation.
The distance between the oven and the socket must be such that the power cable is not stretched. Furthermore, the cable must not be located under the base of the oven.

The equipment's electrical circuit is designed to operate with a power supply voltage according to the configurations shown in the Tables in chapter 11, with a frequency of 50/60Hz. See wiring diagram Fig. 2 referring to the model purchased.
The electrical connection is made by connecting a cable to the equipment's terminal block by removing the right side panel with the appropriate tools.

Use cable type H07RNF or equivalent and an efficient and correctly sized earth conductor according to the total power of this appliance (see rating plate).

If the power cable is damaged, it must be replaced by the customer service or qualified personnel.
The appliance's electrical supply system must be equipped upstream with an appropriately-sized automatic omnipolar circuit breaker that ensures a gap of at least 3 mm between the contacts. There must not be any breaks in the earth cable.

The electrical safety of this appliance is only guaranteed when the above-mentioned conditions are met and if the system's equipotential situation is also compliant (use the connection screw located near the power cable input and the symbol sticker ⏚).

Any operations carried out on electrical systems must be performed by qualified personnel.
The manufacturer declines all responsibility in the event that these safety standards are not complied with.

7. OPERATION/USE

7.1 Intended use and restrictions

- The equipment covered by this manual is designed solely for baking pizzas and its by-products. Any other use shall be considered improper.
- The machines have not been designed for use in unsupervised environments. Furthermore, the appliances are not suitable for outdoor installations and/or environments subjected to the weather (rain, direct sunlight, etc.)
- Do not store explosive substances such as pressurised containers or items containing a flammable propellent.

7.2 Switching on the oven for the first time

When using the equipment for the first time, it is recommended to clean the steel parts with a neutral detergent and a damp cloth.
Make sure the machine is in a large, well-ventilated room. Then proceed to switch on the oven as follows:

- Turn on the protection switch located upstream of the equipment.
- Open the chimney valve completely.
- Turn the master switch D in Fig. 1 to position “1”.
- If it is a digital control panel, switch on thermostats “B” and “C” in Fig. 1 by pressing the ON key.
- Adjust the thermoregulator to 300 ºC.
- When the desired temperature is reached, check that the indicator light (E) is off .
- Run the oven working empty for at least 8 hours in a ventilated room, before the first baking . Do not cook any food during this phase.

The possible presence of fumes or bad odours at this stage is due to the evaporation of the processing residues of the internal components

7.3 Start up phase

- Turn on the protection switch located upstream of the equipment.
- Open the chimney valve to the maximum.
- Turn the master switch D in Fig. 1 to position “1”.
- If it is a digital control panel, switch on thermostats “B” and “C” in Fig. 1 by pressing the ON key. Adjust the thermostat to the desired temperature.
- Keep the chimney valve closed to reach the desired temperature faster.
- When the desired temperature is reached, check that the indicator (E) is switched off.

7.4 Digital thermostat

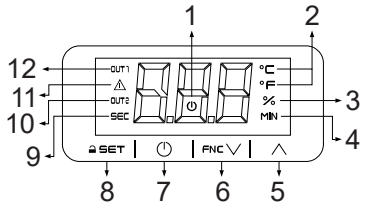

Legend
1 – On/stand-by indicator lamp
2 – Temperature unit
3 – Inactive
4 – Inactive
5 – Up
6 – Down
7 – On/stand-by escape
8 – Keyboard lock set
9 – Inactive
10 – Inactive
11 – Alert
12 – Regulator

USE

LED	ON	OFF	FLASHING
OUT1	regulator active	-	• regulator protection active • setpoint being set
⚠	alarm active	-	-
⏻	device switched off	device switched on	• device being switched off
°C/°F	temperature display	-	-

If Loc = 1 and 30 s have elapsed without the keys being pressed, the display will show the “Loc” label and the keypad will lock automatically.

Unlocking the keypad
Touch a key for 1 s: the display will show the label “UnL”.

Setting the setpoint
For touch key models: check that the keypad is not locked.

1	SET	Touch the SET key
2	FNC ∨ ∧	Touch the UP or DOWN keys within 15 s to set the value within the limits r1 and r2 (default “0... 350”)
3	SET	Touch the SET key
4	⏻	Touch the ON/STANDBY key (or take no action for 15 s) to exit the procedure in advance: the device will not save the entered value.

Silencing the buzzer

For touch key models: touch a key.

Modification of the thermostat CONFIGURATION PARAMETERS, set by the manufacturer, must only be carried out by qualified personnel using the instrument's instructions.

7.5 Touch Control

USER INTERFACE AND MAIN FUNCTIONS

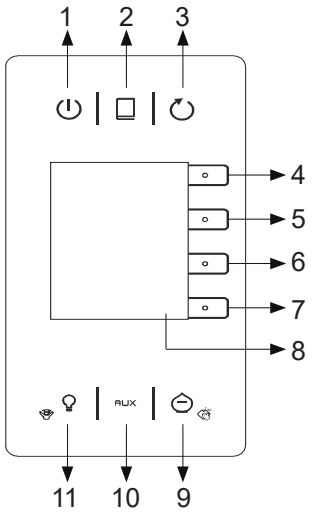

1 - ON / Stand-by
2 - Programs
3 - Start / Stop
4 - Interactiv 1
5 - Interactiv 2
6 - Interactiv 3
7 - Interactiv 4
8 - Display
9 - Energy Saving
10 - Auxiliary
11 - Chamber light

Switching the device on/off

To switch the device on:

1 | Touch the ON/STAND-BY key.

To switch the device off:

1 | Touch the ON/STAND-BY key for 3 s.

If the device is on and the operating logic has independent regulation of the top and floor power (P2 = 0, default), the display will show:

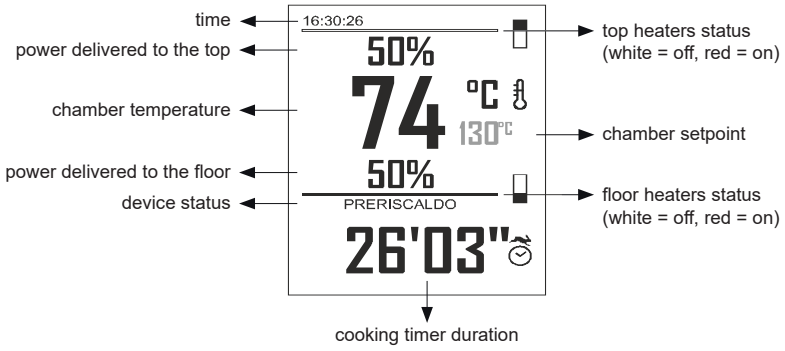

If the chamber setpoint has been reached, the status of the device will show "READY", if not, it will show "PRE-HEATING".
If the device is on and the operating logic has independent regulation of the top and floor temperature (P2 = 1), the display will show:

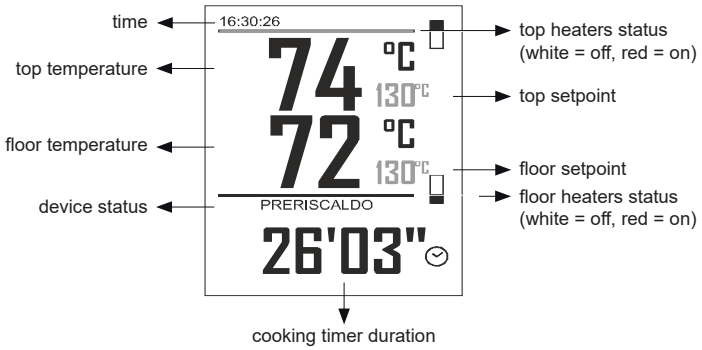

If the top and floor setpoints have been reached, the status of the device will show "READY", if not, it will show "PRE-HEATING".

If the device is switched off, the display will show the time. If the weekly programmed switchon function is activated, the display will also show the day and time of the next switch-on and the programme that will start.

Starting up/interrupting the cooking cycle

To start up a cooking cycle:
- make sure that the device is switched on
- make sure that the cooking timer is set

1		Touch the START/STOP key: the cooking timer will start up and the status of the device will show “COOKING”. When the timer stops, it will show “END”.

To interrupt the cooking cycle:

1		Touch the START/STOP key for 1 s.

Setting the cooking timer

Make sure that the device is switched on.

1		Touch the INTERACTIVE 4 key: the display will show the minutes in yellow.
2		Touch the INTERACTIVE 1 key or the INTERACTIVE 2 key within 15 s to set the value.
3	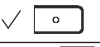	Touch the INTERACTIVE 3 key: the display will show the seconds in yellow.
4		Touch the INTERACTIVE 1 key or the INTERACTIVE 2 key within 15 s to set the value.
5	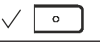	Touch the INTERACTIVE 3 key (or take no action for 15 s).
6		Touch the INTERACTIVE 4 key to exit the procedure beforehand (any changes made will not be saved).

Setting the chamber setpoint (if P2 = 0)

Make sure that the device is switched on.

1		Touch the INTERACTIVE 2 key: the display will show the value inyellow.
2		Touch the INTERACTIVE 1 key or the INTERACTIVE 2 key within 15 s to set the value within the limits r1 and r2 (default “0...300”).
3	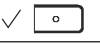	Touch the INTERACTIVE 3 key (or take no action for 15 s).
4		Touch the INTERACTIVE 4 key to exit the procedure beforehand (any changes made will not be saved).

Setting the top and floor setpoints (if P2 = 1)

To set the top setpoint:
- make sure that the device is switched on

1		Touch the INTERACTIVE 1 key: the display will show the value in yellow.
2		Touch the INTERACTIVE 1 key or the INTERACTIVE 2 key within 15 s to set the value within the limits r1 and r2 (default “0...300”).
3	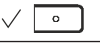	Touch the INTERACTIVE 3 key (or take no action for 15 s).
4		Touch the INTERACTIVE 4 key to exit the procedure beforehand (any changes made will not be saved).

To set the floor setpoint:
- make sure that the device is switched on

1	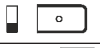	Touch the INTERACTIVE 3 key: the display will show the value in yellow.
2		Touch the INTERACTIVE 1 key or the INTERACTIVE 2 key within 15 s to set the value within the limits r1 and r2 (default “0...300”).
3	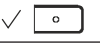	Touch the INTERACTIVE 3 key (or take no action for 15 s).
4		Touch the INTERACTIVE 4 key to exit the procedure beforehand (any changes made will not be saved).

Setting the power delivered to the top and floor (if P2 = 0)

The power delivered means the switch-on time of the top and floor heaters, calculated as a percentage of the cycle time r8.

To set the power delivered to the top:
- make sure that the device is switched on

1		Touch the INTERACTIVE 1 key: the display will show the value in yellow.
2		Touch the INTERACTIVE 1 key or the INTERACTIVE 2 key within 15 s to set the value.
3	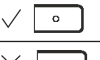	Touch the INTERACTIVE 3 key (or take no action for 15 s).
4		Touch the INTERACTIVE 4 key to exit the procedure beforehand (any changes made will not be saved).

To set the power delivered to floor:
- make sure that the device is switched on

1		Touch the INTERACTIVE 3 key: the display will show the value in yellow.
2		Touch the INTERACTIVE 1 key or the INTERACTIVE 2 key within 15 s to set the value.
3		Touch the INTERACTIVE 3 key (or take no action for 15 s).
4		Touch the INTERACTIVE 4 key to exit the procedure beforehand (any changes made will not be saved).

PROGRAMS

It is possible to save up to 50 programs. To start up the cooking cycle with the settings stored in the program, touch the START/STOP key.
Each program can consist of one or two cooking phases.

To add the second phase:
- make sure that the device is switched on

1		Touch the CHAMBER LIGHT key for 3 s: the display will show the “Expert” menu.
2		Touch the INTERACTIVE 1 key or the INTERACTIVE 2 key to select “Add phase”.
3		Touch the INTERACTIVE 3 key.
4		Touch the INTERACTIVE 4 key to exit the procedure (or take no action for 60 s).

To configure a phase:
- make sure that the device is switched on

1		Touch the CHAMBER LIGHT key for 3 s: the display will show the “Expert” menu.
2		Touch the INTERACTIVE 1 key or the INTERACTIVE 2 key to select a phase.
3		Touch the INTERACTIVE 3 key.
4	Configure the device as shown in the previous paragraphs.	

To delete the second phase:
- make sure that the device is switched on

1		Touch the CHAMBER LIGHT key for 3 s: the display will show the “Expert” menu.
2		Touch the INTERACTIVE 1 key or the INTERACTIVE 2 key to select “Delete phase”.
3		Touch the INTERACTIVE 3 key.
4		Touch the INTERACTIVE 3 key again.
5		Touch the INTERACTIVE 4 key to exit the procedure (or take no action for 60 s).

Storing a program
Configure the device as shown in the previous paragraphs.

1		Touch the PROGRAMS key for 3 s: the display will show the “Programs” menu, “Programs” appears in yellow.
2		Touch the INTERACTIVE 1 key or the INTERACTIVE 2 key to select a position, any previously stored programs will be overwritten.
3		Touch the INTERACTIVE 3 key: “Programs” will become white.
4	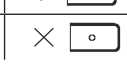	Touch the INTERACTIVE 4 key to exit the procedure (or take no action for 60 s).

Starting a program
Make sure that the device is switched on.

1		Touch the PROGRAMS key: the display will show the “PROGRAMS”menu.
2		Touch the INTERACTIVE 1 key or the INTERACTIVE 2 key to select a program.
3		Touch the INTERACTIVE 3 key: the program will start up, the status of the device will show the name of the program.
4		Touch the INTERACTIVE 4 key to exit the procedure (or take no action for 60 s).

Deleting a program
Make sure that the device is switched on.

1		Touch the PROGRAMS key: the display will show the “Programs” menu.
2		Touch the INTERACTIVE 1 key or the INTERACTIVE 2 key to select a program.

3		Touch the INTERACTIVE 4 key for 3 s.
4		Touch the INTERACTIVE 3 key.
5		Touch the INTERACTIVE 4 key to exit the procedure (or take no action for 60 s).

WEEKLY PROGRAMMED SWITCH-ON

It is possible to save up to 9 weekly programmed switch-ons. A program will start up when the device is switched on. To start up the cooking cycle with the settings stored in the program, touch the START/STOP key.

Storing a switch-on
- make sure that parameter C5 is set to 1 (default)
- make sure that at least one program has been stored
- make sure that the device is switched off

1		Touch the INTERACTIVE 3 key.
2		Touch the INTERACTIVE 1 key or the INTERACTIVE 2 key to select “Add switch-on”.
3		Touch the INTERACTIVE 3 key.
4		Touch the INTERACTIVE 1 key or the INTERACTIVE 2 key to select “Day”.
5		Touch the INTERACTIVE 3 key: the display will show the day in yellow.
6		Touch the INTERACTIVE 1 key or the INTERACTIVE 2 key within 15 s to set the value.
7		Touch the INTERACTIVE 3 key (or take no action for 15 s).
8		Touch the INTERACTIVE 1 key or the INTERACTIVE 2 key to select “Time”.
9		Touch the INTERACTIVE 3 key: the display will show the time in yellow.
10		Touch the INTERACTIVE 1 key or the INTERACTIVE 2 key within 15 s to set the value.
11		Touch the INTERACTIVE 3 key: the display will show the minutes in yellow.
12		Touch the INTERACTIVE 1 key or the INTERACTIVE 2 key within 15 s to set the value.
13		Touch the INTERACTIVE 3 key (or take no action for 15 s).
14		Touch the INTERACTIVE 1 key or the INTERACTIVE 2 key to select “Program”.
15		Touch the INTERACTIVE 3 key: the display will show the program in yellow.
16		Touch the INTERACTIVE 1 key or the INTERACTIVE 2 key within 15 s to set the value.
17		Touch the INTERACTIVE 3 key (or take no action for 15 s).
18		Touch the INTERACTIVE 1 key or the INTERACTIVE 2 key to select “Save”.
19		Touch the INTERACTIVE 3 key.
20		Touch the INTERACTIVE 4 key to exit the procedure (or take no action for 60 s).

Activating the switch-ons

1	Switch off the device.	
2		Touch the INTERACTIVE 1 key or the INTERACTIVE 2 key to select a switch-on.
3		Touch the START/STOP key: the display will show the day and time of the next switch-on and the program that will start.
		Touch the ON/STAND-BY key to switch the device off without activating the switch-ons.

Changing a switch-on
- Make sure that the device is switched off.

1		Touch the INTERACTIVE 3 key.
2		Touch the INTERACTIVE 1 key or the INTERACTIVE 2 key to select “Switch-ons”.
3		Touch the INTERACTIVE 3 key: the display will show the switch-ons in yellow.
4		Touch the INTERACTIVE 1 key or the INTERACTIVE 2 key to select a switch-on.
5		Touch the INTERACTIVE 3 key.
6		Touch the INTERACTIVE 4 key to exit the procedure (or take no action for 60 s).

Deleting a switch-on
- Make sure that the device is switched off.

1		Touch the INTERACTIVE 3 key.
2		Touch the INTERACTIVE 1 key or the INTERACTIVE 2 key to select “Switch-ons”.
3		Touch the INTERACTIVE 3 key: the display will show the switch-ons in yellow.
4		Touch the INTERACTIVE 1 key or the INTERACTIVE 2 key to select a switch-on.
5		Touch the INTERACTIVE 3 key.
6		Touch the INTERACTIVE 1 key or the INTERACTIVE 2 key to select “Delete switch-on”.
7		Touch the INTERACTIVE 3 key.
8		Touch the INTERACTIVE 3 key again.
9		Touch the INTERACTIVE 4 key to exit the procedure (or take no action for 60 s).

7.6 Total shutdown

When the unit is to be decommissioned for a lengthy period, the following measures must be taken:

- In case of digital control panel, turn off the appliance by turning off the digital temperature controller;
- Move the main switch D to ”0” position;
- Disconnect the upstream switch of the equipment.
- Empty the baking chamber and thoroughly clean the stone bottom;
- Protect the stainless steel surfaces by covering them with Vaseline oil, rubbing vigorously with a cloth soaked in the oil;

8. CLEANING AND MAINTENANCE

8.1 Routine maintenance

The appliance must only be cleaned after the power supply upstream has been disconnected and having checked that the oven is cold.
During the maintenance operations, the cable and the plug must be always visible and accessible for the operator who is performing the operations. Routine and preventive maintenance consists essentially of weekly cleaning of stainless steel parts with a damp cloth and a neutral non-corrosive soap, followed by careful drying.
After each use of the machine is recommended to clean the refractory stone bottom using a special brush to remove any food residue. Do not use direct jets of water.

8.2 Unplanned maintenance

Before carrying out any maintenance work, put the appliance in a safe condition. Unplanned maintenance is carried out in the event of a fault or malfunction. It must only be performed by qualified personnel and with the appliance disconnected from the power mains. In this case, repairs or replacements might be required. The faulty parts must only be replaced with materials and components that are identical to the originals or have been specified by the Supplier. The use of unsuitable materials can make the machine non-compliant with the safety standards. The manufacturer declines all responsibility for damage resulting from work carried out by unqualified or unauthorised technicians.

If the user replaces components or modifies the appliance without written permission from the Manufacturer, or uses unauthorised spare parts, the guarantee will immediately become null and void.

8.3 Possible malfunctions

- **The oven does not heat up even if temperatures are set correctly and heating elements lights are off.**
  Check that the main switch is positioned on “1” and that there is electricity.

- **The analog thermometer is not reading the correct temperature.**
  Replace the thermometer.

- **The internal lamp does not turn on.**
  Check that the bulb has not burned out.

- **Smoke comes out with the door closed.**
  Adjust the smoke outlet knob differently.

- **The cooking chamber does not heat up properly.**
  Check that the set temperature is correct and replace the probe if necessary.

- **The temperature continues to rise above the set parameters.**
  Check probes and thermostats and replace them if necessary.

- **The door does not stay closed properly.**
  Replace the spring.

9. DISPOSAL

At the end of its service life, the appliance must be disconnected from the power mains before the various components are disassembled. Special care must be taken to avoid the risk of injury related to the shape and weight of each component.

This appliance is marked according to the European directive 2012/19/UE on Waste Electrical and Electronic Equipment (WEEE).



The symbol on the product indicates that it should not be considered as domestic waste. The appliance must be disposed of in accordance with the laws in force, most especially in regards to the disposal of the refrigerant. The various parts (electrical components, rubber hoses, cable sheaths, etc.) must be sorted for recycling in order to make the best possible contribution whilst protecting the environment and complying with the laws in force.

10. ATTACHED DOCUMENTATION

- Test sheet
- Wiring diagram
- Thermostat instruction booklet