08/2017

Mod: CUT-H12/N

Production code: 40794602HL_

Diamond
catering equipment

CUTTER 6
CUTTER 12
CUTTER 20

HORIZONTAL CUTTERS

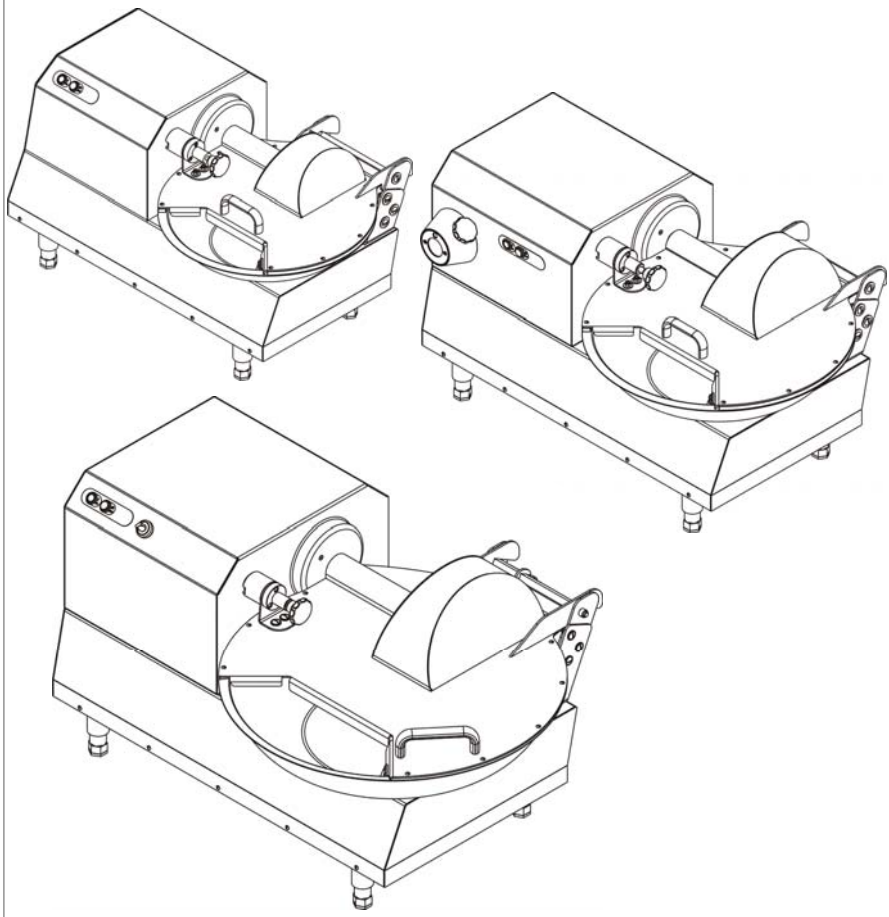

USE AND MAINTENANCE MANUAL

Ed. 12/2016

INDEX

1. Delivery and warranty **5**

1.1 - Introduction
1.2 - Storage and use of the manual
1.3 - Warranty
1.4 - Description of the machine
1.5 - Intended use
1.6 - Improper use
1.7 - Machine identification
1.8 - Safety guards and devices
1.9 - Warning and danger signs/labels
1.10 - Operating position
1.10 - Environmental conditions
1.12 - Lighting
1.13 - Vibrations
1.14 - Protective equipment

2. Technical characteristics **10**

2.1 - Main parts
2.2 - Technical specifications
2.3 - Size and weight of the machine
2.4 - Wiring diagrams
2.4.1 - Wiring diagram of single-phase
2.4.2 - Wiring diagram of three-phase
2.4.3 - Wiring diagram of single-phase cutter 12 with inverter
2.4.4 - Wiring diagram of single-phase cutter 12 - 220V with delta inverter
2.4.5 - Wiring diagram of single-phase cutter 20 with inverter
2.4.6 - Wiring diagram of single-phase cutter 20 - 220V with delta inverter
2.5 - Noise level emitted by the machine

3. Testing, transport, delivery and installation **18**

3.1 - Testing
3.2 - Delivery and handling of the machine
3.2.1 - BOM included with machine
3.3 - Installation site
3.3.1 - Installation
3.3.2 - Packaging disposal
3.3.3 - Handling the machine
3.4 - Electrical connection
3.4.1 - Three phase 400 Volt 50 Hz and 230 Volt 50 Hz machine
3.4.2 - Single phase 230 Volt 50 Hz machine
3.4.3 - Inverter Auto-calibration (only for cutter 12-20 VV)

4. Controls and indicators **22**

4.1 - List of controls and indicators

5. Starting and stopping the machine **22**
5.1 - Checking the electrical connection
5.2 - Checking for presence and efficiency of safety guards and devices
5.3 - Machine start-up
5.4 - Machine stop
5.5 - Inversion

6. Use of the machine **24**
6.1 - Persons authorised to operate the machine
6.2 - Operating mode of the cutter
6.3 - Emptying and cleaning the tank
6.3.1 - Emptying the tank
6.3.2 - Cleaning the tank
6.3.3 - Assembling the tank
6.4 - Disassembling and adjusting the blades

7. Optionals **28**
7.1 - Power take-off (PTO)
7.2 - Speed control

8. Maintenance **28**
8.1 - Maintenance instructions
8.2 - Introduction
8.3 - Checks carried out at our manufacturing plant
8.4 - Checks and inspections to be carried out during installation
8.5 - Routine checks
8.6 - Cleaning the machine
8.7 - Lubrication
8.8 - Replacement of spare parts

9. Troubleshooting **31**
9.1 - Troubleshooting

1 Delivery and warranty

1.1 - *Introduction*

The symbols used in this manual are meant to draw the reader's attention to a set of points and operations that are potentially dangerous to the personal safety of operators or that entail the risk of damaging the machine. Do not operate the machine unless you are certain that you fully understand the instructions and guidelines highlighted in the notes.

IMPORTANT!

For the sake of clarity, some illustrations in this manual depict the machine or parts of it with the panels or casings removed. **D**o not use the machine under such conditions, but only if all of the guards are assembled correctly and are working perfectly. The manufacturer prohibits the reproduction, even partial, of this manual, and its contents may not be used for any purpose other than those explicitly authorised by the manufacturer. Any infringement will be prosecuted according to law.

1.2 - *Storage and use of the manual*

The purpose of this manual is to inform the users of the machine by means of texts and detailed illustrations of the rules and essential guidelines for transporting, handling, use and maintenance of the machine. Carefully read this manual before using the machine.

Store it carefully near the machine, in a place that is easily and quickly accessible for any future reference. If the manual is lost or damaged, request a copy from your dealer or directly from the manufacturer.

In the event of transfer of the machine, be sure to inform the manufacturer of the contact details and address of the new owner. The manual reflects the state of the art at the time the machine was introduced on the market and cannot be considered inadequate if updated versions are issued as a result of technological progress. Regarding the above, the manufacturer reserves the right to update the production and associated manuals without the obligation to update previous productions and manuals, unless in exceptional cases.

In case of doubt, consult your nearest service centre or the manufacturer directly. The manufacturer is committed to continuously improving the state of the art of its product (s).

For this reason, the manufacturer welcomes any suggestions from its customers that may help improve the machine and/or the manual. The machine was delivered to the user under the warranty conditions valid at the time of purchase. Please contact your supplier if you wish to receive clarifications or more information.

1.3 - *Warranty*

Under no circumstances is the user authorised to tamper with the machine. Should you uncover malfunctions or flaws, contact the manufacturer. Any attempt to disassemble, modify or more generically tamper with any component of the machine by the user or by unauthorised personnel will result in the revocation of the **Declaration of conformity** issued pursuant to **EC Directive 2006/42**, will invalidate the warranty and relieve the manufacturer of any liability for damages to persons and property caused by such attempts.

The manufacturer shall also consider itself relieved of any responsibility in the following cases:

- improper installation;
- improper use of the machine by inadequately trained staff;
- use of the machine contrary to the regulations/standards in force in the country of use;
- lack of or negligent maintenance;
- use of non-original spare parts and non-specific for the model;
- total or partial inobservance of the instructions.

1.4 - *Description of the machine*

The cutter in your possession is a simple machine with high performance and power output. Because it must be used to mince and mix food products, the components that may come in contact with the product have been carefully chosen to ensure the highest level of hygiene. The blades on all models are built in stainless steel AISI 420 to ensure longer durability and maximum hygiene.

Operations for emptying the tank:

- set the circuit breaker upstream of the machine to "0",
- turn the release knob on the lid counter-clockwise,
- open the lid,
- turn the lock knob of the blade holder,
- remove the blade holder,
- turn the tank counter-clockwise,
- lift the tank.

The controls are placed in an easily accessible location and consist of two 24V buttons. Special care was applied when designing the machine to ensure that operators can perform cleaning tasks with ease, in particular thanks to the following constructional features:

- simple removal of the propeller without the need for tools,
- all electrical parts manufactured according to a minimum degree of protection **IP 56**.

The models depicted in this manual were built in accordance with **EC Directive 2006/42** as amended. In the event of an accident, no responsibility can be charged to the manufacturer if the machine has been altered or tampered with, if its safety guards have been removed or if the machine is used for purposes not intended by the manufacturer.

1.5 - *Intended use*

The machine was designed and built for shredding, mincing and mixing meat for sausages and vegetables.
It must be used in professional environments. Staff assigned to its use must be skilled sector operators that must have been present during installation of the cutter and during explanation of its operation and proper use by the dealer. They must also have read this manual carefully before using the machine.

The operator must use items of clothing approved for accident prevention such as work gloves made from kevlar that are compliant with the health & safety standards suitable for contact with food and for the handling of blades. Consult the employer with regard to the current safety regulations and the safety measures to be adopted.
The cutter should be installed indoors, protected from the weather and from extreme temperature fluctuations.

1.6 - *Improper use*

The cutter must only be used for the purposes approved by the manufacturer; more specifically:

- **Do not** use the machine to mix foodstuffs other than meat or vegetables.
- **Do not** use the machine if it is not properly installed with all the safety guards intact and assembled correctly, in order to avoid the risk of severe personal injury.
- **Do not** access the electrical components without having previously cut-off power supply to the machine: **doing so entails the risk electrocution.**
- **Do not** process products in quantities exceeding the total capacity of the tank.
- **Do not** wear clothing that does not comply with the applicable accident prevention regulations. Consult your employer as to the applicable safety regulations and safety devices to be used.
- **Do not** start the machine if it is malfunctioning. Before using the machine, make sure that you have removed/solved any safety-threatening condition. If you notice any kind of malfunction or flaw, stop the machine and warn those responsible for maintenance.
- **Do not** allow unauthorised personnel to perform operations on the machine. Urgent treatment in case of an accident caused by electric current requires first of all pulling the injured person away from the machine (as the person will have likely lost consciousness). This is a hazardous operation. The injured person in this case is an electric conductor: touch him means getting electrocuted. It is advisable to disconnect the contacts directly from the line valve or, if this is not possible, to move the victim using insulating materials (sticks of wood or PVC, fabric, leather, etc.).
  It is advisable to have medical staff intervene immediately and to hospitalise the victim.
- **Do not** use the machine in environments where there are gases in the atmosphere that involve a high chance of combustion.
- **Do not** perform any operation without prior authorisation.
- **Follow** the procedures given for maintenance and technical assistance.

1.7 - *Machine identification*

Model.....
Serial number.....
Year of manufacture.....
Type.....

An exact description of the "Model", the "Serial number" and the "Year of manufacture" will allow our customer service to provide quick and efficient responses. Please specify the machine model and the serial number whenever you contact our customer service. This information is printed on the rating plate (see Fig. 1.7.1. We suggest you keep track of the machine's identification details by filing out the boxed frame shown below.

A = Model of the machine
B = Power supply
C = Engine power
D = Engine frequency (Hz)
E = Weight
F = Amperage
G = Year of manufacture
H = Serial number
I = Manufacturer
L = Barcode

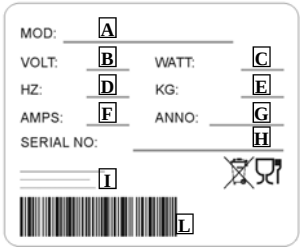

Fig. 1.7.1

IMPORTANT!
Do not under any circumstances alter the data printed on the rating plate.

1.8 - *Safety guards and devices*

IMPORTANT!
Before starting the machine, make sure that the safety devices are in place and intact. **C**heck for their presence and efficiency at the beginning of each work shift. If the safety devices are not installed and/or are inefficient, contact the Maintenance Manager.

1. Tool protective lid.
   The purpose of the lid is to prevent accidental contact of the hands with the tool. (Fig. 1.8.1)
2. Microswitches (Fig. 1.8.1):
   2a lid,
   2b tank (both installed).

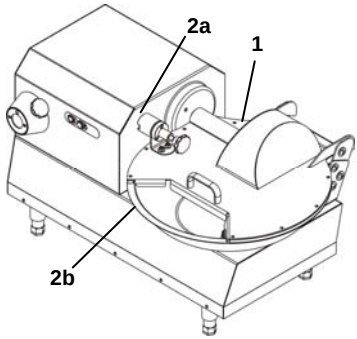

IMPORTANT!
Do not under any circumstances tamper with the safety devices.

1.9 - *Warning and danger signs/labels*

IMPORTANT!

Do not intervene on the electrical components whenever the machine is connected to the electrical network. Doing so entails a serious risk of electrocution. **Comply with the warnings indicated on the signs/labels. Failure to comply with the warnings may cause personal injury and even death.**

Make sure that the signs/labels are intact and clearly legible. If otherwise, re-attach or replace them.

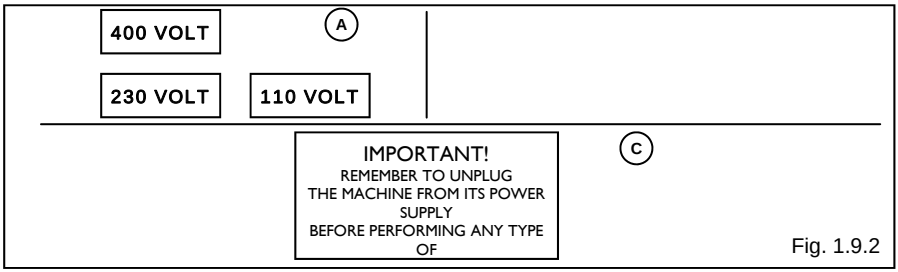

Fig. 1.9.2

Fig. 1.10.1

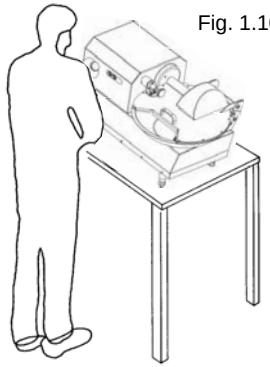

1.10 - *Operating position*

The correct position of the operator in order to work efficiently with the mixer is shown in Fig. 1.10.1.

1.11 - *Environmental conditions*

The machine is designed to operate in the following environmental conditions:
- minimum ambient temperature: -5 °C;
- maximum ambient temperature: +40 °C;
- relative humidity: 50% at 40 °C.

1.12 - *Lighting*

The place of installation of the mixer must have sufficient natural light and artificial lighting in accordance with the regulations/standards in force in the country of installation. In any case, the lighting must conform to the regulations/standards in force in the country where the machine is delivered and must not create hazardous reflections. The lighting should allow the operator to clearly read the control panels and identify the buttons to start/stop the machine.

1.13 - *Vibrations*

The machine does not transmit significant vibrations.

1.14 - *Protective equipment*

The operator must use items of clothing approved for accident prevention such as work gloves made from kevlar that are compliant with the health & safety standards suitable for contact with food. Consult the employer with regard to the current safety regulations and the safety measures to be adopted.

2 Technical characteristics

2.1 - *Main parts*

To facilitate understanding of the manual, the main components of the machine are listed and shown in the Fig. 2.1.1 Main parts of the machine.

1. Electric motor;
2. Lid unlocking knob;
3. Tank;
4. Cutter (blades);
5. Lid;
6. Controls;
7. Tank gearbox;
8. PTO gearbox
   (optional for cutter 12).

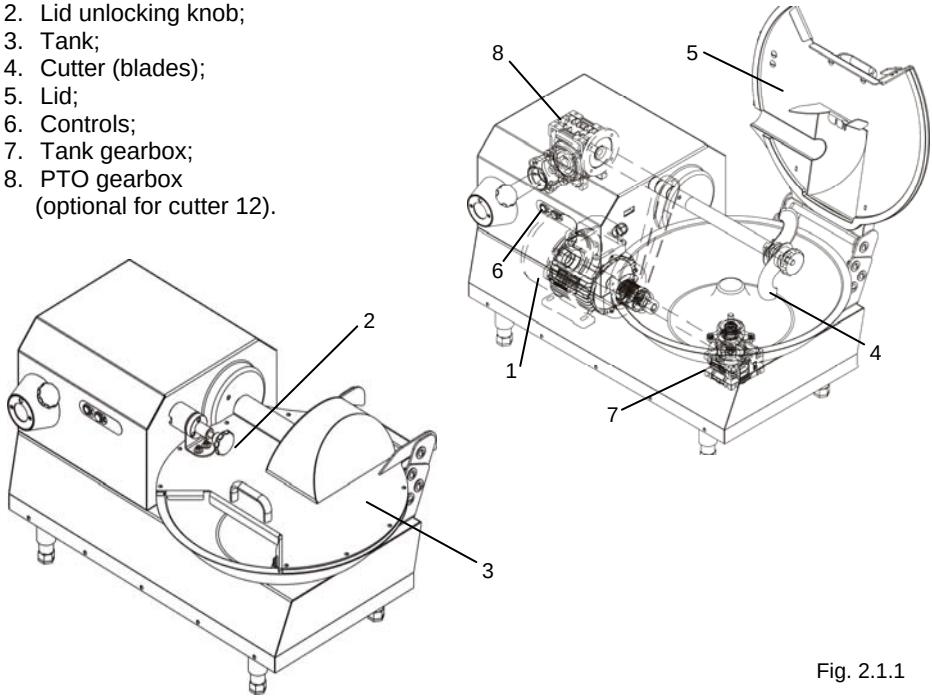

Fig. 2.1.1

2.2 - *Technical specifications*

CUTTER	Motor Blades	Ampere	Motor Tank	Ampere	Power supply	Tank	Capacity
	Watt/Hp	A	Watt/Hp	A	Volt/Hz	mm	Lt/Kg
6	370/0,5	1,8	/	/	230/50	Ø430 h.71	6/4,5
	370/0,5	1	/	/	380/50	Ø430 h.71	6/4,5
12	750/1	3,5	90/0,12	0,88	230/50	Ø505 h.91,5	12/9
	750/1	2	90/0,12	0,88	380/50	Ø505 h.91,5	12/9
20	2200/3	4,6	90/0,12	0,88	380/50	Ø605 h.106,5	20/15

2.3 - *Size and weight of the machine*

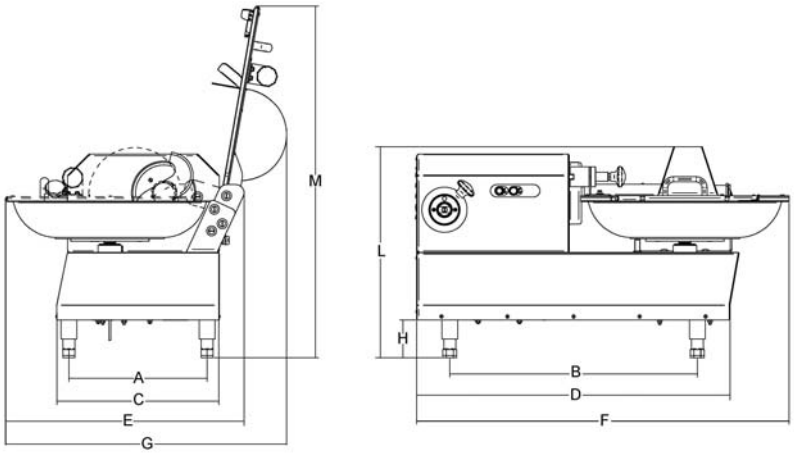

Fig. 2.3.1

CUTTER	AxB	CxD	ExF	G	H	L	M	Weight
	mm	mm	mm	mm	mm	mm	mm	kg
6	297x540	356x714	516x832	582	92	472	760	60
12	335x600	393x758	587x902	680	92	508	850	75
20	390x650	450x820	700x1013	822	92	572	1010	92

2.4 - *Wiring diagrams*

2.4.1 - Wiring diagram of single-phase

Fig. 2.4.1

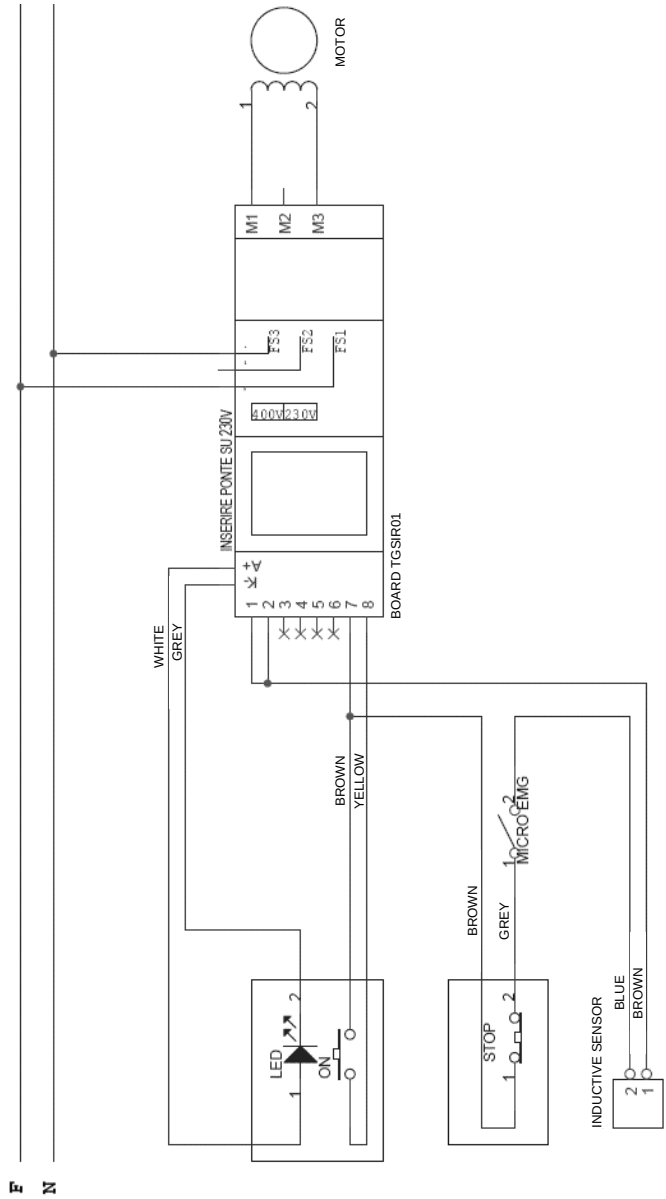

2.4.2 - Wiring diagram of three-phase

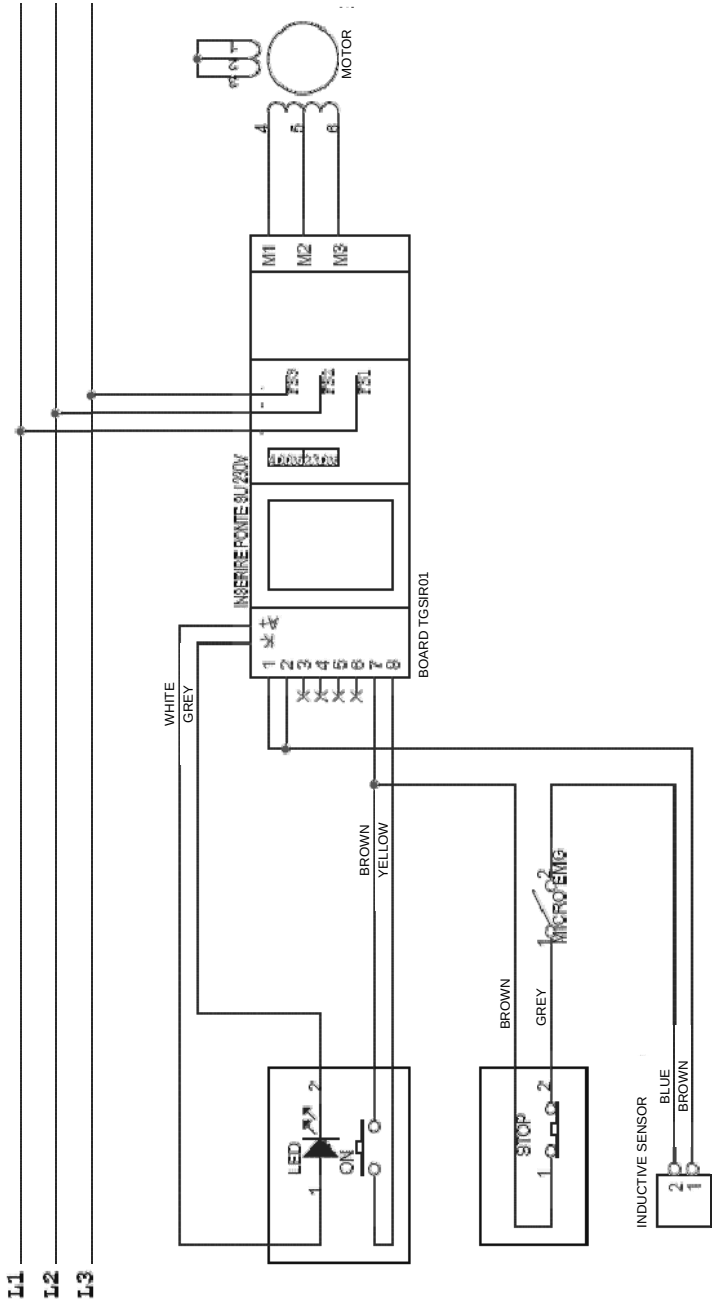

Fig. 2.4.2

2.4.3 - Wiring diagram of single-phase cutter 12 with inverter

Fig. 2.4.3

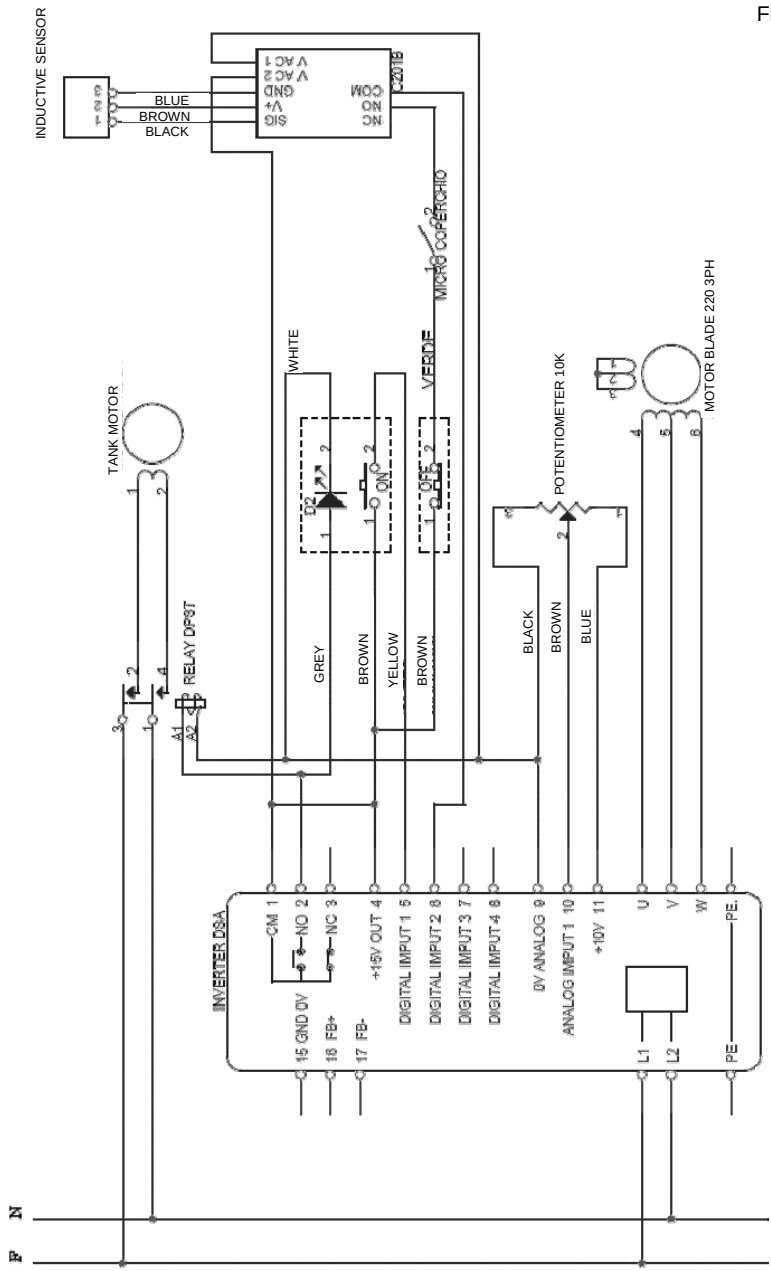

2.4.4 - Wiring diagram of single-phase cutter 12 - 220V with delta inverter

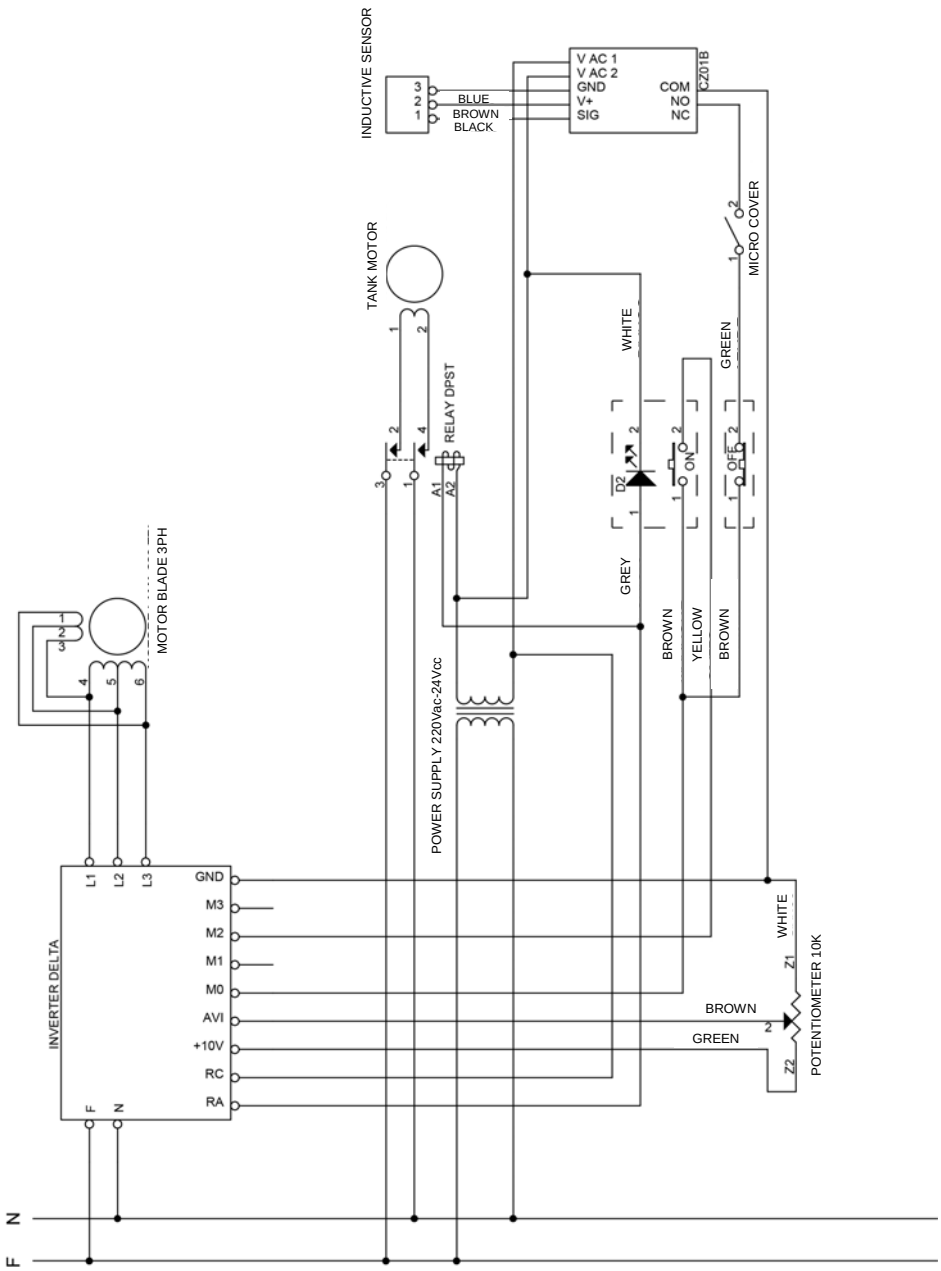

2.4.5 - Wiring diagram of single-phase cutter 20 with inverter

Fig. 2.4.5

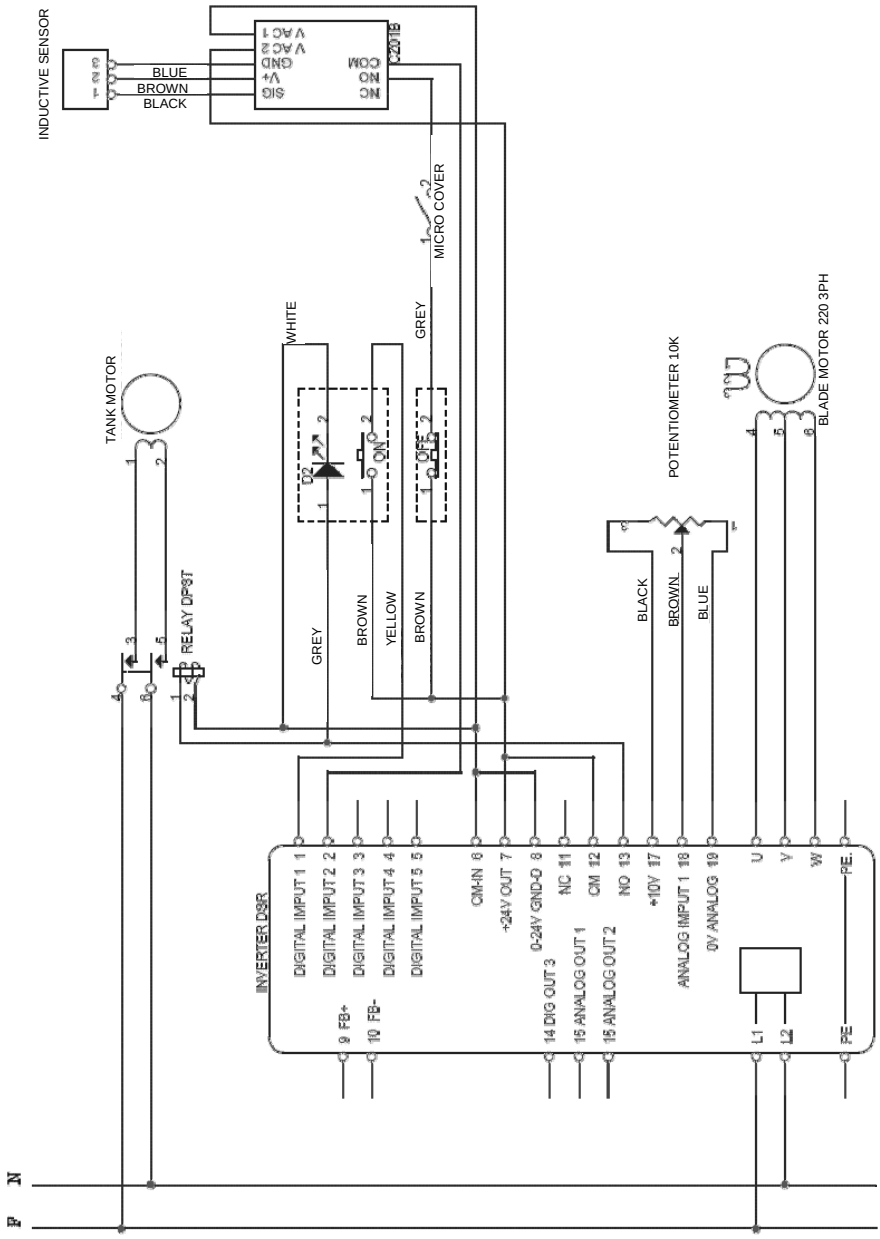

2.4.6 - Wiring diagram of single-phase cutter 20 - 220V with delta inverter

Fig. 2.4.6

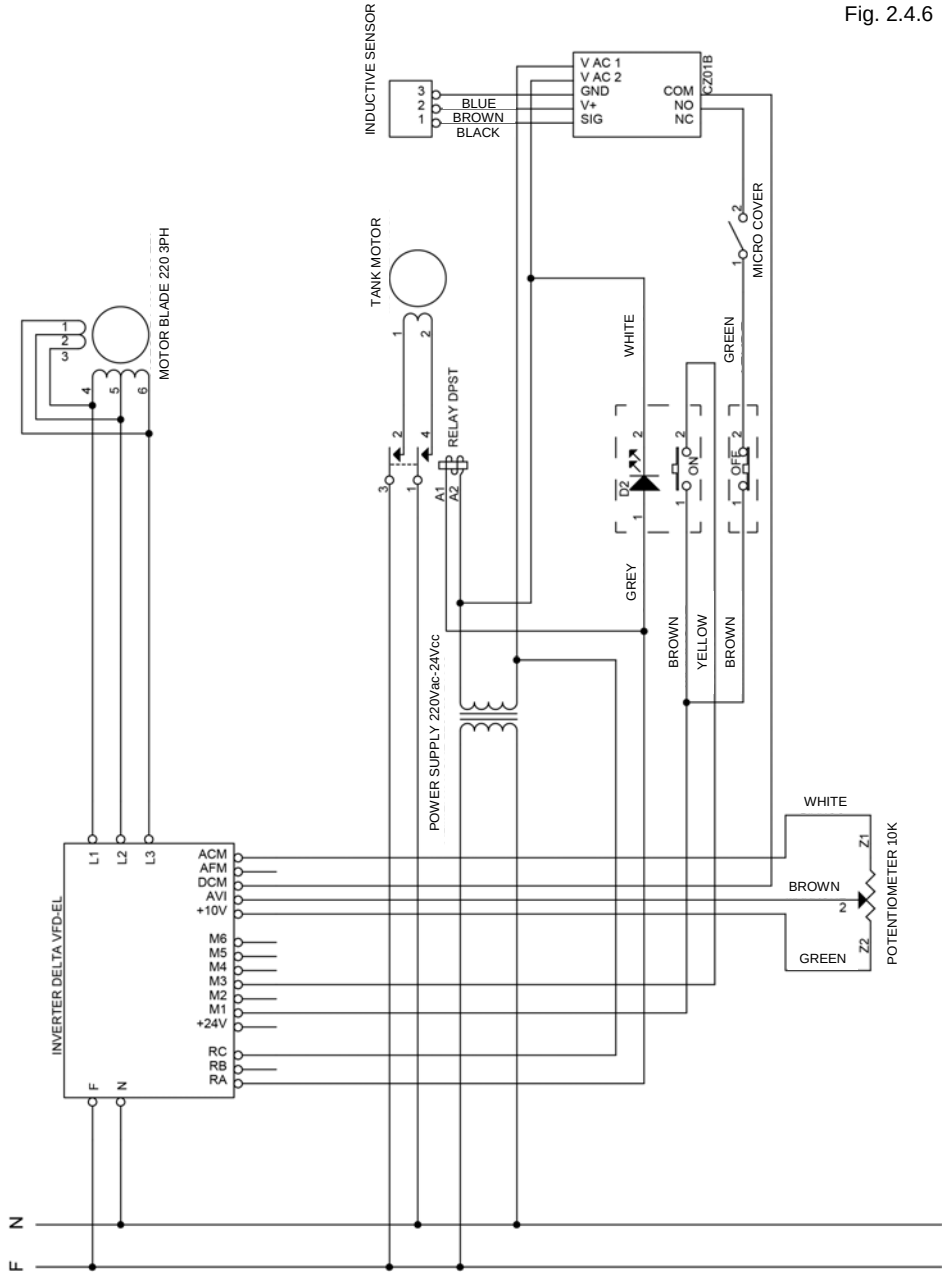

2.5 - *Noise level emitted by the machine*
The measured noise level emitted by the machine is equivalent to less than 70 dBA. On request, the manufacturer can provide a copy of the noise test.

3 Testing, transport, delivery and installation

3.1 - *Testing*
The machine in your possession has been tested at our manufacturing plant in order to ensure its proper operation and adjustment. The testing process involves tests on material that is identical to the one the machine operator will use.

3.2 - *Delivery and handling of the machine*
All the material shipped to customers was carefully checked before delivering it to the carrier. Unless otherwise agreed with the customer, or in the event of particularly expensive transport, the machine is packed on a wooden pallet, protected with cardboard and fastened with straps.
The dimensions of the packing are shown in Fig. 3.2.1.
Check the integrity of the packing when you receive the machine.
If the packing is damaged, sign the transport docket, including the the phrase: "Accepted with reservations..." and specifying the reason.
If after opening the packing, you notice that certain components of the machine are damaged, file a claim with the carrier within three days from the date printed on the transport docket.

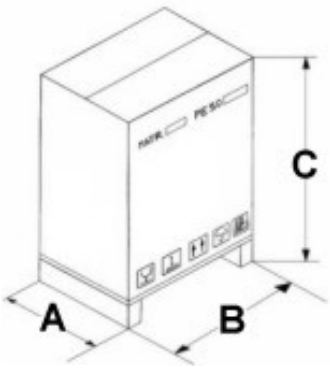

Fig. 3.2.1

Model	Packing (mm) (AxBxC)	Gross weight (kg)
CUTTER 6	675 x 1200 x H760	70
CUTTER 12	675 x 1200 x H760	85
CUTTER 20	675 x 1200 x H760	127

3.2.1 - BOM included with machine
The machine is delivered along with the following documents/materials:

- No. 1 use and maintenance manual (this manual).

3.3 – *Installation site*

IMPORTANT!

The site where you intend to install the machine must be solid and horizontal and the base must be sturdy enough to withstand its weight safely.
In addition, the machine must have ample space around it (overall encumbrance), as shown in Fig. 2.4.1. This allows the operator greater manoeuvrability during work and will facilitate future maintenance.
Provide sufficient lighting around the machine, in order to ensure proper visibility to the operator who is using the mixer.

3.3.1 - Installation

Use a forklift or other similar equipment to handle the package, as the machine is supplied on a pallet protected with cardboard.

- Remove the two straps that hold the cardboard box fastened to the pallet.
- Remove the cardboard.
- Remove the cellophane wrapped around the machine and any other packing material inside.

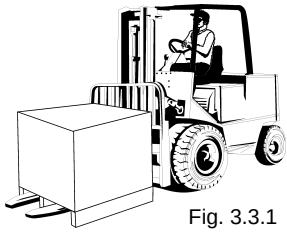

Fig. 3.3.1

3.3.2 - Packaging disposal

Packing components like cardboard, nylon and wood are products comparable to solid urban waste, which makes them freely disposable.
If the machine is delivered in countries where there are particular requirements for waste disposal, dispose of the packaging in accordance with the regulations/standards in force.

3.3.3 – Handling the machine

Lift the machine with a forklift of suitable capacity.
Check the stability and position of the load on the forks, especially along rough, slippery or titled surfaces. During handling, keep the load as low as possible to ensure greater stability and visibility. **W**iden the forks to stabilise the grip as much as possible.
At least two operators are required to manually handle the mixer.

3.4 - *Electrical connection*

IMPORTANT!

Check that the power supply corresponds to the value shown on the machine identification plate. **A**ll tasks on electrical components must be carried out only by specialised personnel that is expressly authorised by the on-site manager in charge. **C**onnect the machine to a network with efficient earthing.

3.4.1 - Three phase 230 Volt-50 Hz machine

In this set-up, the machine is supplied with a power cable with section 4 x 1.5 mm. This cable is connected to a three-phase three-pole plug+earth. Fasten the cable to the three-phase power network with a magneto-thermal circuit-breaker (16 Amp).



3.4.2 - Single phase 230 Volt-50 Hz machine

In this set-up, the machine is supplied with a power cable with section 3 x 1.5 mm. This cable is connected to a single-phase three-pole plug. Fasten the cable to the single-phase power network (220V-50 Hz) with a magneto-thermal circuit-breaker (16 Amp).

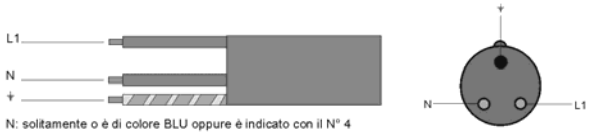

For machine set-ups with different voltages, please consult the manufacturer,(in these cases, the machine is supplied without a mains plug).
If you need to stretch the power cable, use a cable of the same section as the one installed by the manufacturer.
For instructions on how to check the proper electrical connection, see par. 5.1.

4.3 - Inverter Auto-calibration (only for cutter 12-20 VV)

Once our cutters are assembled they're programmed according to the line voltage present in our company.
However, the line voltage has difficulties keeping the same value in all the laboratories where the cutter, once sold, is installed.
To fix this problem, regarding 12-20 cutters with inverter, it is advisable to always carry out an auto-calibration procedure of the inverter.

NOTE: it is not advisable to use extension cords or multiple sockets for the proper functioning of the cutter.
The cutter plug must be connected directly to the power line.
Auto-calibration procedure of the inverter:

Open the rear cover
Before proceeding with the auto-calibration disconnect the machine from the power line, wait
for the inverter display to turn off, wait for another 30 seconds and then reconnect the machine to the electrical outlet (inverter reset).

Auto-calibration (ref. fig. 3.4.3.):

- press M (ref. 1) until the "S" parameter appears on the display (ref 2);
- press up arrow (ref.3) to parameter "S 900";
- press button E (ref. 4);
- press up arrow (ref.3) on the display (ref. 2), the word "do" will appear;
- press E (ref. 4), "done" will appear on the display (ref 2) the machine will run for a few seconds (the cover MUST be closed !!!) wait until the calibration is complete.

Saving data:
- press M (ref. 1) until the parameter "S" appears on the display (ref. 2);
- press up arrow (ref.3) up to parameter "S 901";
- press button E (ref. 4);
- press up arrow (ref. 3), "do" will appear on the display (ref 2);
- press E (ref. 4), "done" will appear on the display (ref 2), the inverter has saved the changes to the program

Fig. 3.4.3

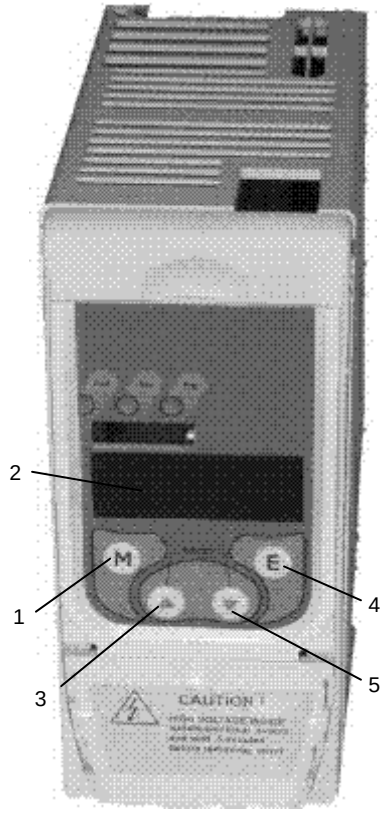

4 Controls and indicators

4.1 - *List of controls and indicators*

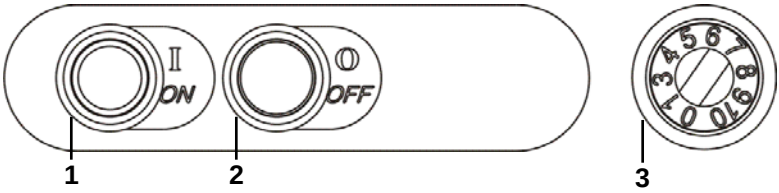

Fig. 4.1.1

1 - Start button (continuous)
- Press the button to start the machine.

2 - Stop button
- Press the button to stop the machine.

3 - Speed control (optional for cutter 12 - 20)
Turn clockwise to increase the speed of the knives or counterclockwise to decrease it.

5 Starting and stopping the machine

5.1 - *Checking the electrical connection*

Switch the circuit breaker installed upstream of the machine to "I".
Press the start button ("1" Fig. 4.1.1), checking the direction of rotation of the tools (380 three-phase version).

The blades must turn clockwise.
If the direction of rotation is counter-clockwise, disconnect the machine from the power supply and contact the dealer nearest to you.

Note:
In machines connected to a single-phase line and configured for this type of power supply, the correct direction of rotation is defined directly by the manufacturer.

5.2 - *Checking for presence and efficiency of safety guards and devices*

1 - Tool protective lid (Fig. 5.2.1)
Visually check for the presence and integrity of the protective lid.

2- Microswitches (Fig. 5.2.1)
2a - with machine running, turn the lid lock knob counter-clockwise: the machine must stop.
2b - remove the tank and try starting the cutter: the machine must not work.
If it does when performing this operation, contact an authorised dealer or directly the manufacturer.

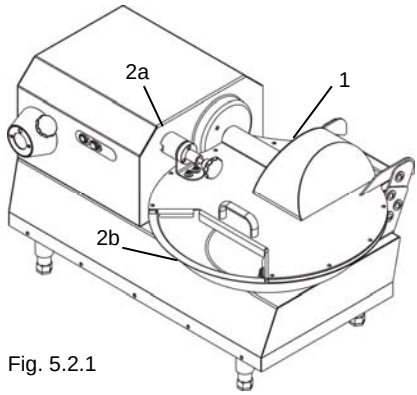

Fig. 5.2.1

IMPORTANT! In the case of absence, defects or incorrect adjustment of the casing, or in case of incorrect functioning of the safety devices listed above, turn the machine off and contact customer service to restore the machine to its original settings.

5.3 - *Machine start-up*
Turn the circuit breaker that supplies power to the machine from "0" to "1". Press start button "1" (Fig. 4.1.1), thus activating tool rotation.

5.4 - *Machine stop*

To stop the machine, press button "2" (stops the electric motor). Then, switch the circuit breaker installed upstream of the machine to "0", thereby disconnecting the cutter.

6 Use of the machine

6.1 – *Persons authorised to operate the machine*

IMPORTANT!

Only authorised staff can intervene on the machine.

Before using the machine, the operator must ensure that all guards are in place and that the safety devices are installed and efficient. Otherwise, turn the machine off and contact the person in charge of maintenance.

Make sure there is sufficient lighting to allow proper visibility to the operator. **R**un the machine idle a couple of times with the assistance of qualified personnel, in order to familiarise with the machine enough to operate it safely.

6.2 - *Operating mode of the cutter*

The product to be processed must be divided into small pieces.

Procedure:

1. open the lid
2. feed the product in the tank at 1/3 full
3. close the lid and lock it with knob “1” Fig. 6.3.1
4. press start
5. add the remaining product gradually via tank inlet “2” Fig. 6.3.1.

Once the product has reached the desired consistency, turn off the machine, open the lid and empty the tank.

6.3 - *Emptying and cleaning the tank*

6.3.1 - Emptying the tank

Turn off the machine, set the circuit breaker to "0"
and detach the power plug.

- Rotate the lid release knob "1" counter-clockwise (Fig. 6.3.1).

- Raise the lid "2" (Fig. 6.3.2).
- Turn the lock knob of the blade holder “3” (Fig. 6.3.2).
- Remove the blade holder “4” (Fig. 6.3.2) from the shaft
- Turn the tank “5” counter-clockwise (Fig. 6.3.3) in order to release it from its seat
- Lift and remove the tank
- Proceed to empty out the tank by removing the shredded product

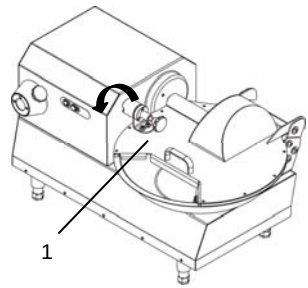

Fig. 6.3.1

6.3.2 - Cleaning the tank

With the machine off, the circuit breaker set to "0" and the power plug detached, clean the tank.

- Rotate the lid release knob “1” counter-clockwise (Fig. 6.3.1).
- Raise the lid "2" (Fig. 6.3.2) and extract it from its seat.
- After having followed the instructions described in Par. 6.4 remove the tube Ref. 6 Fig. 6.3.3.
- Turn the tank “5” counter-clockwise (Fig. 6.3.7) in order to release it from its seat
- Lift and remove the tank.
- The surface is now smooth and easy to clean. (Fig. 6.3.5).
- Proceed to thoroughly clean the machine and disinfect it if necessary.
- With a sponge soaked in water and neutral (pH 7) and non-toxic degreasing products, remove all processing residue from the machine and blades.
- Do not use gasoline, solvents or other flammable liquids as detergents; instead, use authorised commercial solvents (non-toxic solvents and non-flammable).

  Adapt the guards to be used when cleaning and disinfecting the machine based on the type of solvent. Follow the instructions of the cleaning products.

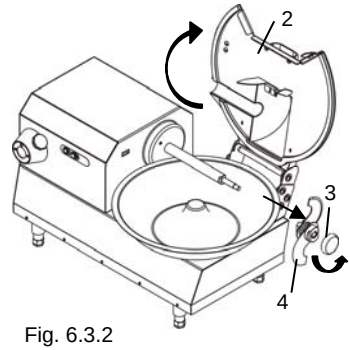

Fig. 6.3.2

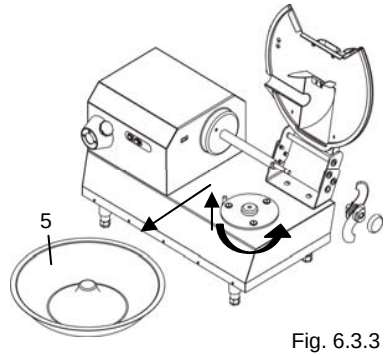

Fig. 6.3.3

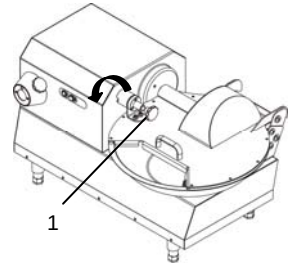

Fig. 6.3.4

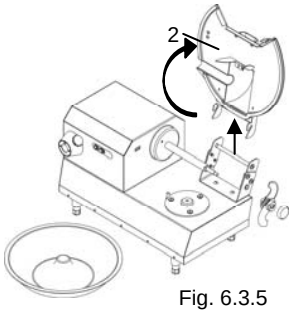

Fig. 6.3.5

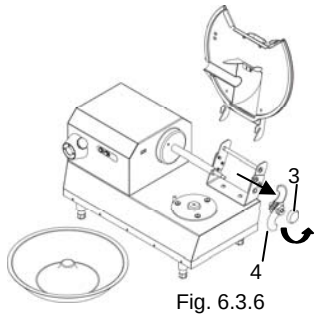

Fig. 6.3.6

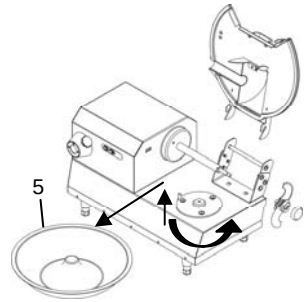

Fig. 6.3.7

6.3.3 - *Assembling the tank*

To assemble the tank, perform the procedure described in the previous paragraph in reverse order, paying attention to re-assemble the tank in its correct position.

- Insert the tank "5" (Fig. 6.3.8) in the drag plate.
- Turn the tank clockwise to lock it into place
- Insert the blade holder “4” (Fig. 6.3.9) on the shaft
- Screw tight the clamping wing nut on the knife hub as in “3” Fig. 6.3.9 as described in paragraph 6.4.
- Lower the lid "2" (Fig. 6.3.9).
- Rotate the lid release knob “1” clockwise (Fig. 6.3.10).

Fig. 6.3.8

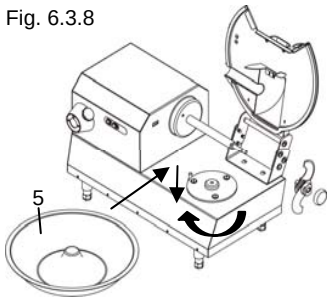

Fig. 6.3.9

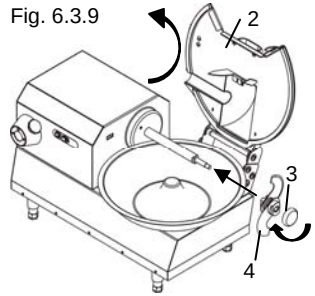

Fig. 6.3.10

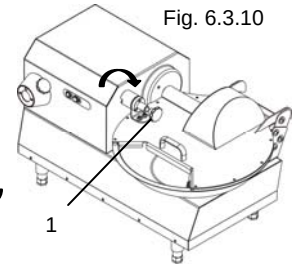

6.4 - *Disassembling and adjusting the blades*

To disassemble the blade holder the use of accident-protection gloves made from kevlar, proceed as follows:

Fig. 6.4.1

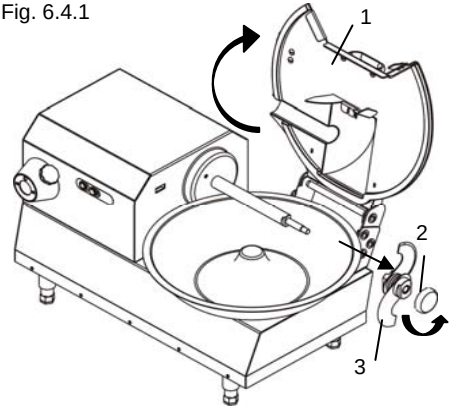

- Switch off the machine, set the circuit breaker to "0" and remove the power plug
- Unlock the lid and lift it, as described in par. 6.3.1
- Place the key provided as in Fig. 6.4.1.A on the tube, making sure it is integral with the milling heads of the knife hub Fig. 6.4.1.B
- Hold the key firmly with your left hand and unscrew the wing nut Ref. 2 Fig. 6.4.1
- Remove the blade holder “3” (Fig. 6.4.1)
- Using two wrenches, unscrew the ring nut "4" (Fig. 6.4.2)
- Adjust the blades so that they are more or less level with the bottom of the tank, depending on the material you intend to introduce in the cutter.
- Now, clamp the blade holder and reposition it on the shaft.

Fig. 6.4.2

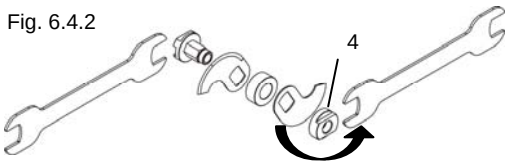

- Lock the blade holder with the knob "2" (Fig. 6.4.1)
- Rotate the shaft by hand to check that the blades do not touch the bottom of the tank. If they do, repeat the adjustment.

Fig. 6.4.3

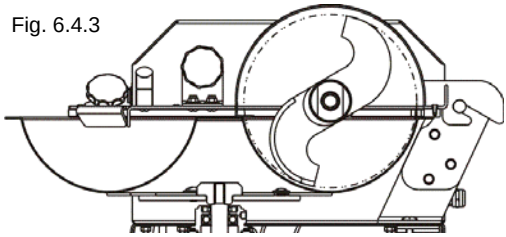

7 Optionals

7.1 - *Power take-off (PTO)*

The customer can request to have a PTO installed in order to attach the meat grinder to it (this option must be requested when placing the order). The PTO installed will rotate counter-clockwise at approximately 190 RPM.

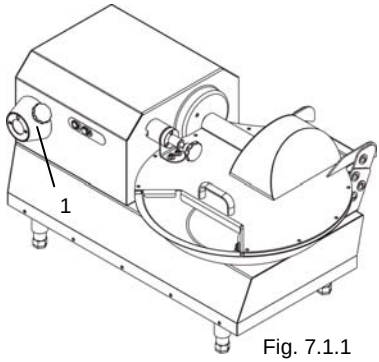

Fig. 7.1.1

7.2 - *Speed control*

Only available for cutter mod. 12-20.
When ordering the cutter choose the version with inverter that allows increasing or decreasing of the standard revolutions of the knives through use of the so-called "potentiometer " knob (ref.3 fig.4.1.1).

8 Maintenance

8.1 - *Maintenance instructions*

IMPORTANT! All maintenance and cleaning of the mixer should be performed only when the machine is stopped and with the plug disconnected from the power supply. The area where you perform maintenance operations must always be kept clean, dry and well-lit. **Do not** allow unauthorised personnel to work on the machine. Staff assigned to its use must be skilled sector operators that must have been present during installation of the cutter and during explanation of its operation and proper use by the dealer. They must also have read this manual carefully before using the machine.
Do not access articulated, sharp and uncontrolled openings of the machine with the body, limbs or fingers, and without adequate protective equipment and guards (appropriate gloves made from kevlar, etc.) **Do not** use gasoline, solvents or other flammable liquids as detergents: instead, use authorised commercial solvents)non-toxic and non-flammable).
Do not use compressed air to clean the machine If you absolutely must use compressed air, protect yourself with goggles having side guards and limit the pressure to a maximum of 2 atm. (1.9 bar). **Do not** use open flames for lighting when performing inspections and maintenance on the machine.

8.2 - *Introduction*

Good maintenance and proper use are essential requirements to ensure the efficiency

and safety of the mixer To ensure regular and constant operation and to avoid invalidation of the warranty, machine components must be replaced only with original spare parts.

8.3 - *Checks carried out at our manufacturing plant*

The manufacturer has conducted a number of tests on the machine in your possession, in order to ensure correct commissioning and include the necessary adjustments.
In particular, the manufacturer has performed the following checks:

Before commissioning:

- Control of the operating voltage of the machine: the voltage must be the same requested by the buyer.
- Checking for the presence of all the warning signs/labels and the rating plate with the technical specifications and serial number.
- Checking of tightness of all bolts and nuts.
- Compliance of the machine to the applicable regulations/standards and to the instructions provided in this manual.

With the machine in operation:

- Checking of the efficiency of the safety devices and guard; the machine must stop when the operator opens the grille.
- General operating control.
- Execution of repeated tests in order to verify the machine's set-up, according to the type of work it will be used for.

8.4 - *Checks and inspections to be carried out during installation*

To make sure that the machine has not been damaged during transport or installation, make sure that you diligently perform the checks and inspections listed below:

Before commissioning:

- Check that the voltage corresponds to the value shown on the machine identification plate.
- Check for the presence and integrity of the warning and danger signs/labels.
- Check the integrity of the power cable.
- Check that the safety devices, such as magnetic sensors, are intact.

Checks with machine in operation:

- Check the efficiency of the safety guards and devices. These may have been damaged or impaired during transport.
- Perform a few test runs with products of the same size of the material you will then process.

8.5 - *Routine checks*

To maintain the features and reliability of your machine consistent over time, you should perform additional checks and inspections (besides those described hitherto) with the frequency listed below.

Before each work shift:

- Check the operation of the safety devices - daily.
- Check the integrity of the power cable.

IMPORTANT!
If the machine does not stop when you open the lid or in the event of other malfunctions, request the assistance of customer service.
After every work shift:

- Thoroughly clean the machine by removing any processing residue.
- Remove, clean and replace the blades and tank.

8.6 - *Cleaning the machine*

At the end of each work shift, thoroughly clean the machine and disinfect it if necessary (Chapter 6.3.2).
- Stop the machine, switch the circuit breaker installed upstream of the mixer to "0" and detach the power plug.
- With a sponge soaked in water and neutral and non-toxic degreasing products, remove all processing residue from the machine.

Do not use gasoline, solvents or other flammable liquids as detergents; instead, use authorised commercial solvents (non-toxic solvents and non-flammable).
Adapt the guards to be used when cleaning and disinfecting the machine based on the type of solvent. Follow the instructions of the cleaning products.
Adeguare le protezioni da utilizzare nella pulizia e disinfezione in base al prodotto adottato. Seguire le istruzioni dei prodotti utilizzati.

IMPORTANT!
The cutter has been designed and manufactured to process meat and vegetables; therefore, it is compulsory to use non-toxic and neutral detergents that are suitable to disinfect components used to process foodstuffs.

8.7 - *Lubrication*

The transmission gearbox is greased for life and therefore does not have to be replaced from time to time.



Directive 2002/95/EC, 2002/96/EC and 2003/108/EC on the restriction of the use of certain hazardous substances in electrical and electronic equipment, and waste electrical and electronic equipment .

This symbol, crossed out wheelie bin, on the product or on its packaging indicates that this product must not be disposed of with your other household waste.

Separate waste collection of this appliance is organised and managed by the manufacturer. It is the user's responsibility to contact the manufacturer and follow the waste treatment system the manufacturer has adopted for separate waste collection.

The separate collection and recycling of your waste equipment at the time of disposal will help to conserve natural resources and ensure that it is recycled in a manner that protects human health and the environment.

8.9 - *Replacement of spare parts*

Contact your local dealer should you need to order spare parts. Do not use spare parts that are not original. Please remember that the machine must be assembled by qualified personnel only.

9 Troubleshooting

9.1 - *Troubleshooting*

Problem(s)	Cause(s)	Solution(s)
The machine does not start.	The circuit breaker is set to "0".	Turn the main switch to "1".
	The cutter plug is not connected directly to the line socket; an extension cord and/ or a multi-socket has been used.	Remove the extension cord and/or multi-socket and connect the cutter plug directly to the line socket.
	The lid is not locked.	Lower the lid and turn the knob counter-clockwise.
	The tank is missing.	Assemble the tank, fastening it correctly to the pull mechanism.
	The cutter's tank or lid microswitch is not working.	Contact customer service.
	The auto-calibration procedure was not carried out (only for the 12-20 VV cutter).	Carry out auto-calibration procedure (see par. 3.4.3)
	The electric motor or the electrical board are defective.	Contact customer service.
	The buttons will not start the blades.	Contact customer service.