MOD : L1411/VAD-SD3

Production code : DSLALDX147

09/2026

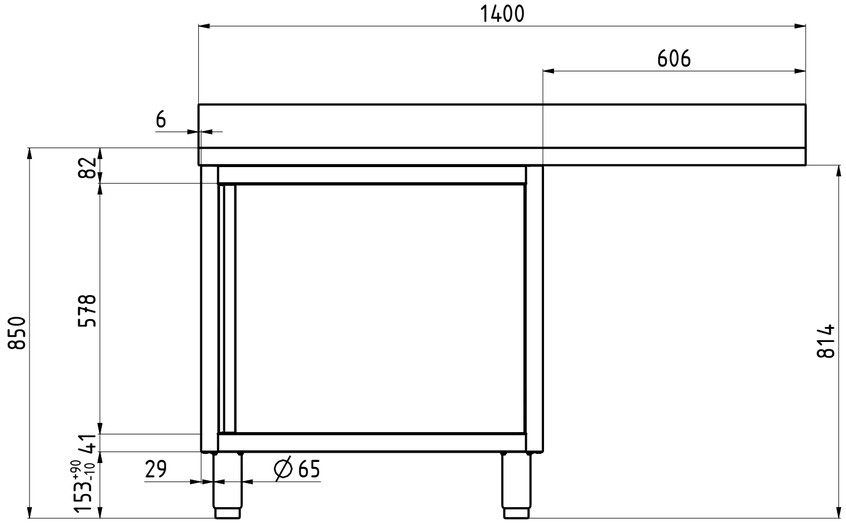

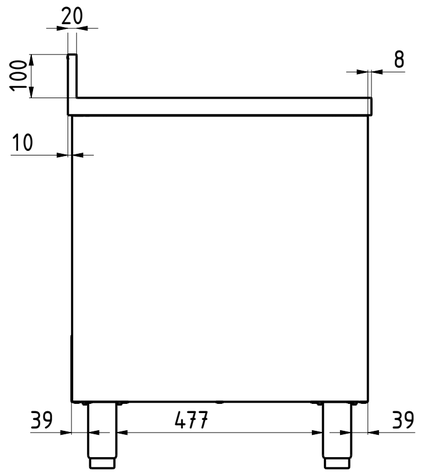

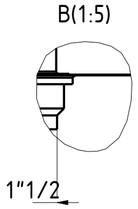

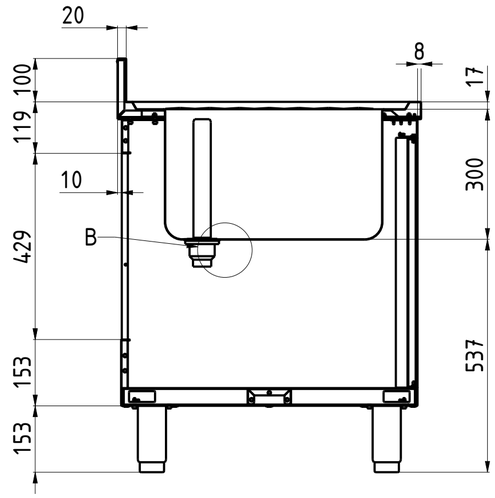

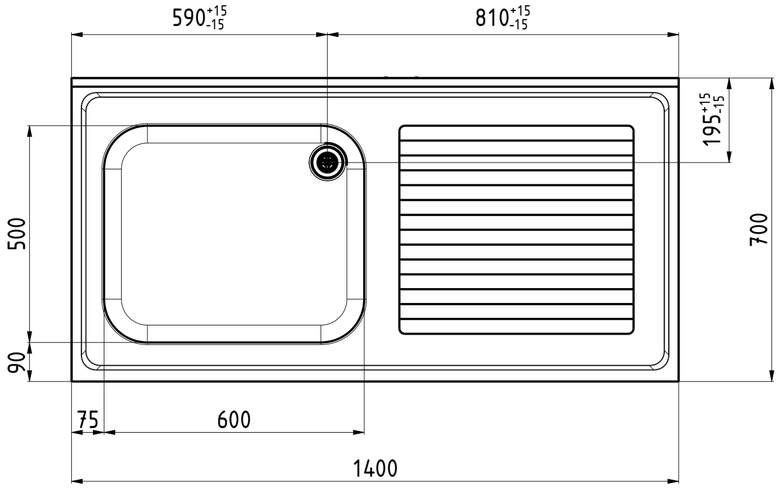

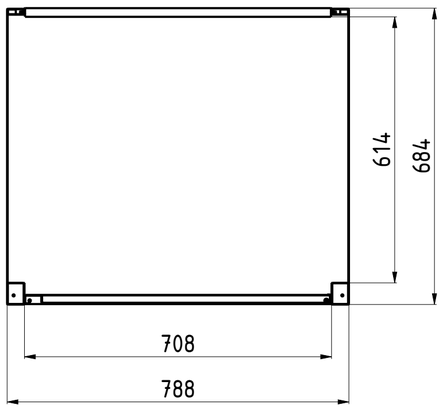

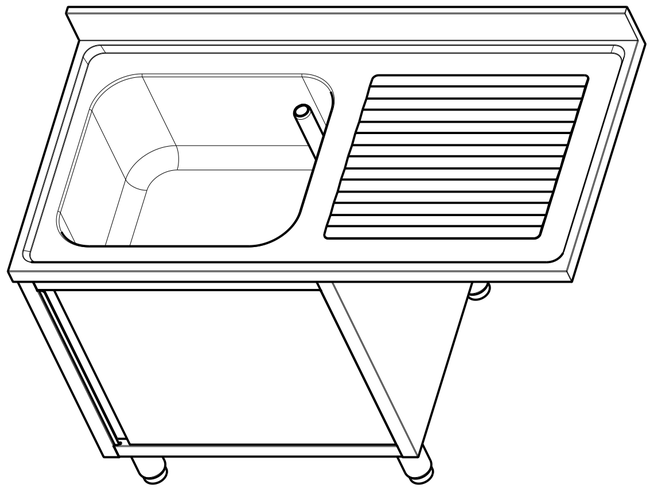

DATA DATE	MODIF.N. MODIF.NO.	DESCRIZIONE MODIFICHE MODIFICATION DESCRIPTION	DISEGNATO DRAWN BY	APPROVATO APPROVED

MODELLO MODEL	LAVATOIO ARMADIATO PORTA BATTENTE 1 VASCA VANO LAVAST. DX 1400X700X850	DISEGNO N. DRAWING NO. L1411/VAD-SD3	SCALA SCALE
PARTICOLARE DETAIL	SCHEDA TECNICA DATA SHEET	DISEGNATO DRAWN BY	DATA DATE
MATERIALE MATERIAL	SPESS. THICK.	APPROVATO APPROVED	SHEET 1 OF 1
FINITURA FINISH	PEZZI N. PIECES NO.	SOSTITUISCE IL DIS. N. IT REPLACES DRAWING NO.	ULTIMA EMISS. LAST EDITION
TRATTAMENTO TREATMENT	COLORE COLOUR	SOSTITUITO DAL DIS. N. REPLACED BY DRAWING NO.	

Diamond

mm

FORM.A-2

ELABORATO CON SISTEMA CAD
DESIGNED BY CAD SYSTEM

QUOTA PRIMARIA
PRIMARY DIMENSION
XX

ANGOLI
Angles
±0°30'

QUOTE SENZA TOLLERANZA TOLLERANCE UNLESS OTHERWISE STATED

LUNGH. E DIAM. LENGHT AND DIAM.	0-5	5-10	10-18	18-30	30-50	50-80	80-120	120-180	180-250	250-315	315-400	400-500	>500
	±0.10	±0.15	±0.20	±0.25	±0.30	±0.35	±0.40	±0.45	±0.50	±0.55	±0.60	±0.65	±0.75