MOD : WR-C1E1-DS4

Production code : DSLGSR1VGSX147

09/2026

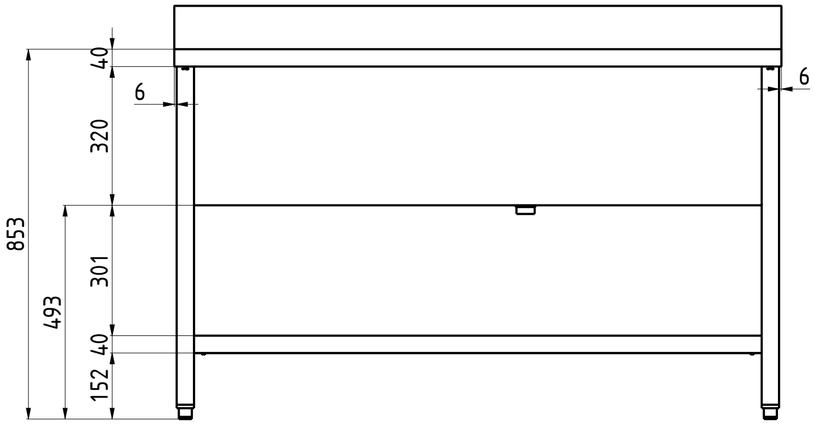

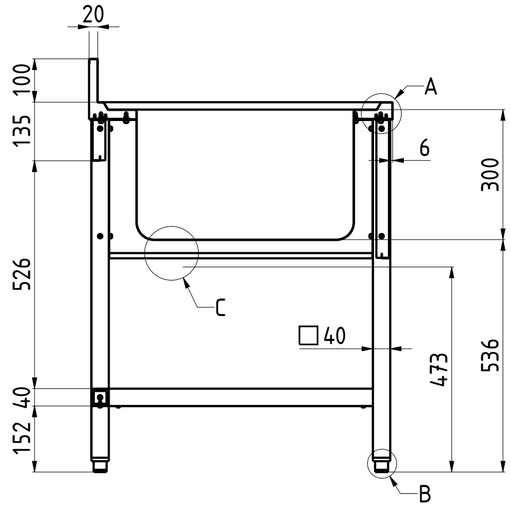

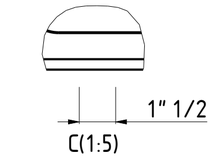

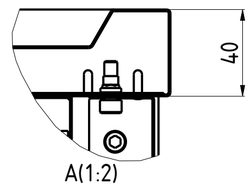

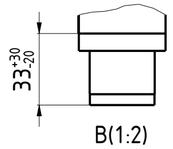

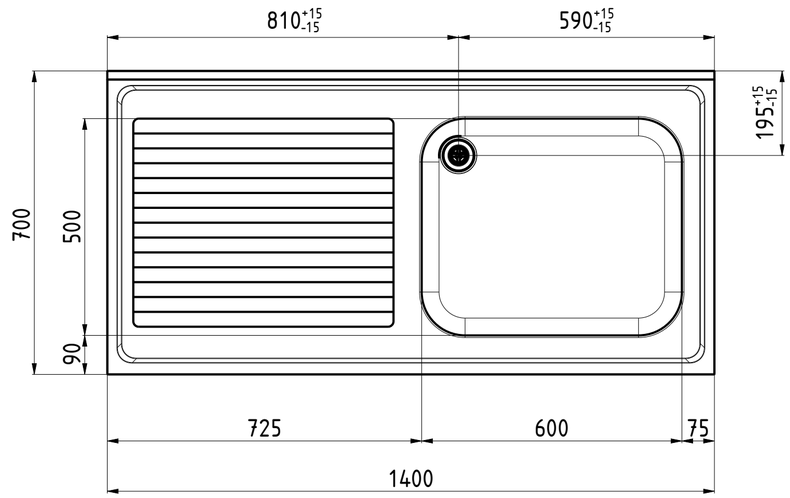

WR-C1E1-DS4

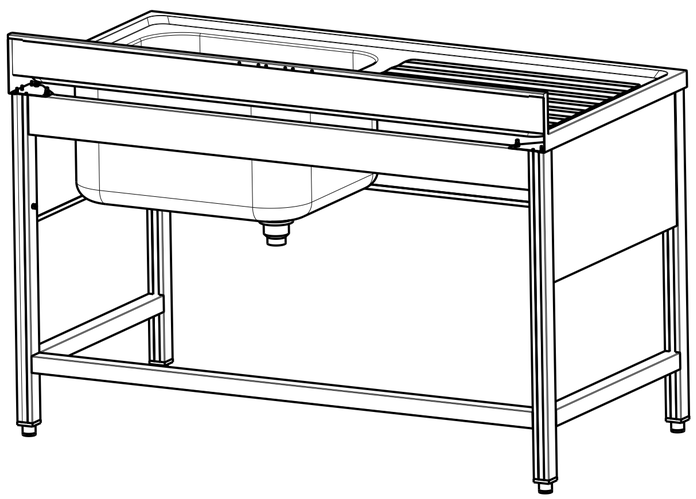

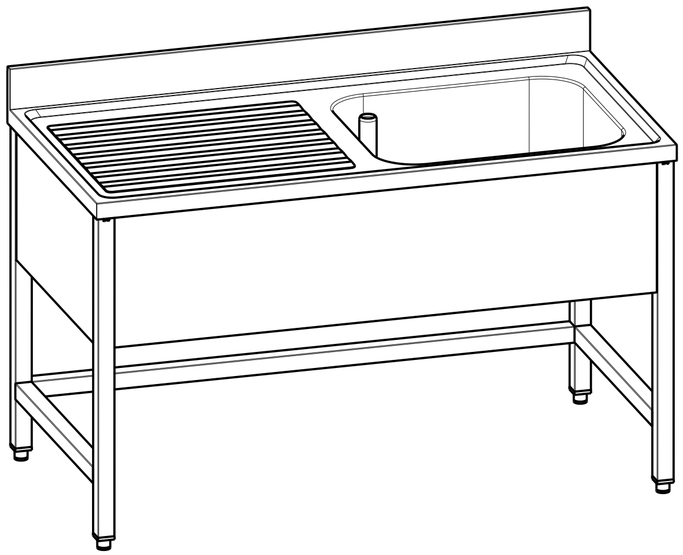

DATA DATE	MODIF.N. MODIF.NO.	DESCRIZIONE MODIFICHE MODIFICATION DESCRIPTION	DISEGNATO DRAWN BY	APPROVATO APPROVED

MODELLO MODEL	LAVATOIO SU GAMBE 1 VASCA SU TELAIO GOCC SX 1400X700X850 SINK ON LEGS 1 BASIN ON FRAME LEFT DRAINER 1400X700X850	DISEGNO N. DRAWING NO. DSLGSR1VGS147	SCALA SCALE -
PARTICOLARE DETAIL	SCHEDA TECNICA DATA SHEET	DISEGNATO DRAWN BY	DATA DATE -
MATERIALE MATERIAL	SPESS. THICK.	APPROVATO APPROVED	SHEET 1 OF 3
FINITURA FINISH	PEZZI N. PIECES NO.	SOSTITUISCE IL DIS. N. IT REPLACES DRAWING NO.	ULTIMA EMISS. LAST EDITION
TRATTAMENTO TREATMENT	COLORE COLOUR	SOSTITUITO DAL DIS. N. REPLACED BY DRAWING NO.	

Diverso

mm

FORM.A-2

ELABORATO CON SISTEMA CAD
DESIGNED BY CAD SYSTEM

QUOTA PRIMARIA
PRIMARY DIMENSION
XX

ANGOLI
Angles
±0°30'

QUOTE SENZA TOLLERANZA TOLLERANCE UNLESS OTHERWISE STATED

LUNGH. E DIAM. LENGHT AND DIAM.	0-5	5-10	10-18	18-30	30-50	50-80	80-120	120-180	180-250	250-315	315-400	400-500	>500
	±0.10	±0.15	±0.20	±0.25	±0.30	±0.35	±0.40	±0.45	±0.50	±0.55	±0.60	±0.65	±0.75