02/2010

Mod: NT22/G-230/1

Production code: IFM22

Diamond
catering equipment

Diamond
catering equipment

CE

DECLARATION OF CONFORMITY

In agreement with the Low Voltage Directive **2006/95 EEC**, with the directive **2004/108 EEC** (EMC9),with the directive **2006/42 EEC** (machines), integrated by the CE mark.

In agreement with Regulation (EC) No. **1935/2004** of the European Parliament and of the Council of **27 October 2004** on materials and articles intended to come into contact with food.

Type of appliance / Machine	**KNEADING MACHINE**
Trademark	**DIAMOND**
Model	**IF17-IF22-IF33-IF42–IF53 IFM7-IFM10-IFM17-IFM22-IFM33-IFM42-IFM53 IR17-IR22-IR33-IR42-IR53 IRM17-IRM22-IRM33-IRM42-IRM53 IF17VS-IF22VS-IF33VS-IF42VS-IF53VS IR17VS-IR22VS-IR33VS-IR42VS-IR53VS**
Manufacturer	**PIZZA GROUP S.r.l.**
Address	
Telephone	
Telefax	

The harmonised standards or technical specifications (designations) that have been applied in agreement with the highest professional standards on safety in force in the EEC are:

Standards or other normative documents	Test report - Technical data sheets
EN 60335-1 EN 60335-2-64	**IMQ PRIMA CONTROL 58 CEEL 99**
EN 292 EN 294 EN 418	**FLAM GAS**
EN 55014 EN 61000-3-2 EN 61000-3-3	

Other information:

In my capacity as manufacturer and/or authorised representative of the company inside the EEC, I hereby declare, under my own responsibility that the appliances conform to the essential requirements of the aforementioned Directives.

San Vito al Tagliamento (PN) **Bellotto Carlo**

07.01.2010 President

The equipment is constructed and tested in accordance with the safety regulations indicated in the reference European directives.

This manual is for people who are going to install, use or service the kneading machine so they may get the very best out of it.

In the case of questions about the contents or for any other clarification, contact the manufacturer or authorized technical assistance centre, providing the number of the section and topic needing clarification.

It is important to keep this manual with the oven, even if it is moved elsewhere or changes hands, so it may be consulted whenever needed, using the information it contains which is necessary to ensure working under safe conditions.

In addition, this document is the property in legal terms, and it is prohibited to tamper with or translate its contents, or distribute it to third parties without authorization.

The technical information, graphic representations and specifications contained in this manual are not to be distributed.

The manufacturer is not obliged to advise of any subsequent changes to the product.

© Copyright 2010

INDEX

1 INTRODUCTION

1.1 SYMBOLS

1.2 INTENDED USE

1.3 PURPOSE AND CONTENTS OF MANUAL

1.4 CONSERVATION OF THIS MANUAL

1.5 MANUAL UPDATING

1.6 GENERAL INFORMATION

1.7 RELEVANT SAFETY AND ACCIDENT PREVENTION REGULATIONS TO BE ADHERED TO

1.8 LEGAL WARRANTY

1.9 MANUFACTURER RESPONSIBILITY

1.10 USER CHARACTERISTICS

1.11 TECHNICAL ASSISTANCE

1.12 SPARE PARTS

1.13 IDENTIFICATION LABEL

1.14 KNEADING MACHINE DELIVERY

2 SAFETY RECOMMENDATIONS

2.1 WARNINGS FOR THE INSTALLER

2.2 WARNINGS FOR THE USER

2.3 WARNINGS FOR THE MAINTENANCE TECHNICIAN

3 MOVEMENT AND TRANSPORT

4 PREPARATION OF THE INSTALLATION AREA

4.1 SAFETY PRECAUTIONS

4.2 MACHINE INSTALLATION LOCATIONS

5 INSTALLATION

5.1 KNEADING MACHINE LEVELLING

5.2 EQUIPMENT HOOK-UP

5.2.1 Electrical connection

5.2.1.1 Ground connection

6 KNEADING MACHINE START-UP AND USE

6.1 COMMAND PANEL DESCRIPTION

6.2 START-UP PHASE

6.3 WORKING PHASE

6.4 SAFETY DEVICES

6.5 SHUT-DOWN PHASE

7 MAINTENANCE AND CLEANING

7.1 SAFETY PRECAUTIONS

7.2 ORDINARY MAINTENANCE FOR THE USER

7.2.1 General cleaning

7.2.2 Upper chain tensioning

7.2.3 Greasing the chains

8 POSSIBLE FAULTS

9 INFORMATION FOR DEMOLITION AND DISPOSAL

10 ELECTRICAL DIAGRAM

11 EXPLODED DIAGRAM AND SPARE PARTS LIST

12 TECHNICAL DATA

Dear client,

Above all, thank you for choosing our product and we would like to congratulate you on your selection.

In order to better use your new kneading machine, please carefully read the information contained in this manual.

1 INTRODUCTION

The manufacturer reserves the right to change technical specifications and features and/or functions of the machine at any time without notice.

1.1 SYMBOLS

In this manual, important information it is highlighted using the following symbols:

☞ **INSTRUCTION**: Instructions pertaining to correct use of the kneading machine and those responsible for using the machine.

❗ **WARNING**: Signifies a particularly important point.

□ **DANGER**: Signifies important information about practices for preventing accidents or damages

1.2 INTENDED USE

The kneading machine versions with a fixed head and tank or with removable head and tank were designed and constructed exclusively for use in food sectors for preparing dough made with grain flours, mainly for use in pizzerias, bakeries and pastry shops.

The intended use described above and the machine configurations are the only uses authorized by the Manufacturer: ***do not use the machine in any way that does not adhere to the provided instructions.***

- The intended use is valid only for equipment which is in good structural, mechanical and engineering condition.

1.3 PURPOSE AND CONTENTS OF MANUAL

Purpose:
The purpose of this manual is to allow the user to operate the machine in adherence to all regulations and to make use of the necessary materials for correct, safe and enduring use.

Contents:
This manual contains all the necessary information for installation, use and maintenance of the kneading machine.

Scrupulous adherence to the information contained in this manual guarantees high safety and productivity levels of the kneading machine.

1.4 CONSERVATION OF THIS MANUAL

Conservation and Consultation:
The manual must be conserved with care and must always be available for consultation, both by the user and by those responsible for assembly and maintenance.

The Use and Maintenance Manual is an integral part of the machine.

Deterioration and Disposal:
If necessary, request another copy of the manual from the manufacturer or dealer.

Transfer of the kneading machine:
If the kneading machine is to be transferred, the user is required to deliver this manual to the purchaser.

1.5 MANUAL UPDATING

This manual is a state of the art explanation of the machine at the moment the machine is released on the market.

The machines which are already available on the market, with their related documentation, will not be considered to be lacking or inadequate following possible modifications, adjustments or applications of new technologies on newly marketed machines.

1.6 GENERAL INFORMATION

Information:
In the case of exchange of information with the Manufacturer or the Dealer regarding the kneading machine, please refer to the serial number and the identification data of the machine reported on the plate.

Responsibility:
With delivery of this manual, the Manufacturer declines any and all responsibility, both civil and criminal, for accidents deriving from partial or total non-adherence to the specifications contained herein.

The Manufacturer declines any and all responsibility deriving from improper use of the machine or incorrect use by the user, unauthorized modifications and/or repairs, use of unoriginal spare parts or parts not appropriate for this machine model.

Extraordinary maintenance:
Extraordinary maintenance operations must be executed by qualified personnel trained to intervene on the kneading machine model referred to in this manual.

Responsibility for installation operations:

☞ Responsibility for kneading machine installation operations are not considered to be responsibility of the Manufacturer. This is, and remains, the responsibility of the installer who is in charge of executing the controls related to the correctness of the

proposed installation. In addition, all safety regulations outlined in currently enforced laws in the state in which the machine is installed must be respected.

Use:
In addition to the instructions contained in this manual, use of the machine is subject to all safety regulations outlined in the specific laws in the state where the machine is installed.

1.7 RELEVANT SAFETY AND ACCIDENT PREVENTION REGULATIONS TO BE ADHERED TO

A) Directive 2006/95/CE "Regarding harmonization of legislation of the member States in relation to electrical materials destined for use within certain voltage limits".

B) Directive 2004/108/CE "Regarding harmonization of legislation of the member States in relation to electromagnetic compatibility and that repealed by Directive 89/336/CEE".

C) Directive 89/391/CEE "Regarding implementation of measures aimed at promotion of improvements in worker safety and health during the work shift".

D) Directive 2006/42/CE "Regarding machines and amendments of the Directive 95/16/CE".

E) Regulation No. 1935/2004 "Regarding materials and objects destined for contact with food products and that repealed by Directives 80/590/CEE and 89/109/CEE".

F) Directive 85/374/CEE and Directive 1999/34/CE "Regarding harmonization of legislative, regulatory and administrative instructions, of the member States in

regards to responsibility for damages caused by defective products".

G) Directive 2002/95/CE "regarding use restrictions of determined hazardous substances in the electrical and electronic equipment".

H) Directive 2002/96/CE and 2003/108/CE "Regarding disposal of electrical and electronic equipment RAEE) and subsequent amendments."

I) Directive EN453:2000 "Machines for food industries - Kneading machines for food products – safety and health requirements".

1.8 LEGAL WARRANTY

The period of the guarantee is in agreement with the European community standards and starts from the date of the invoice issued at the time of purchase..

Within such a period parts will be replaced or repaired free of charge, only **free our works** that, for unequivocal and well ascertained reasons, are found to have manufacturing defects; this does not include electrical components and those subject to wear.

Shipping costs and labor are not included in the guarantee.

In order to make use of the legal warranty, the user must, as outlined in Directive 1999/44/CE, strictly observe the instructions contained in this manual, and in particular:

- always operate the kneading machine within the limits of its intended use;

- always and diligently execute constant maintenance;
- authorize only personnel with adequate skills, behavior and proper training to use the kneading machine.

Non-adherence to the instructions contained in this manual will cause the warranty to be considered immediately null and void.

1.9 MANUFACTURER RESPONSIBILITY

! The manufacturer declines all civil and criminal responsibility, direct or indirect, due to:

- installation that does not conform to local currently enforced regulations and safety directives;
- non-observance of the instructions contained in this manual;
- installation by unqualified and untrained personnel;
- use that does not comply with safety directives;
- modifications and repairs on the machine that are unauthorized by the Manufacturer;
- use of unoriginal spare parts or parts not specific to the kneading machine model;
- lack of maintenance;
- extraordinary events.

1.10 USER CHARACTERISTICS

The user of the kneading machine must be an adult, responsible person having the necessary technical knowledge for ordinary maintenance of the mechanical and electrical components of the machine

Be sure to keep children away from the machine while it is operating.

1.11 TECHNICAL ASSISTANCE

The Manufacturer is able to resolve any problems that occur regarding use and maintenance of the machine for its entire lifespan.

The central headquarters is at your disposal for information about the nearest authorized assistance centre.

1.12 SPARE PARTS

Use exclusively original spare parts.

Do not wait until components are worn out before replacing them.

Replacing a worn component before breakage helps to prevent injuries deriving from accidents caused by unexpected component breakage, which could provoke serious damage to persons or things.

☞ ***Execution of periodical maintenance controls as indicated in the chapter "MAINTENANCE AND CLEANING"***

1.13 IDENTIFICATION LABEL

The identification label placed on the kneading machine contains all of the machine data, including Manufacturer data, the **serial number** and the brand CE.

1.14 KNEADING MACHINE DELIVERY

The kneading machine is provided in a wooden package bound with straps to a wooden platform that can be moved using forklifts and/or other means.

Inside of the package, in addition to the machine, there are also instructions for use, installation and maintenance, as well as the declaration of conformity in accordance with the machines directive.

2 SAFETY RECOMMENDATIONS

WARNINGS FOR THE INSTALLER

- Check that the location of the kneading machine is in compliance with local, national and European regulations.
- Adhere to the instructions in this manual.

- Do not execute electrical connections using temporary or uninsulated cables.
- Check that the ground connection of the electrical system is functioning properly.
- Always use individual safety devices and other means of protection in compliance with the law.

WARNINGS FOR THE USER

The conditions in the surrounding area where the machine will be installed must have the following characteristics:

- the area must be dry;
- the area must have water and heat sources at an adequate distance;
- ventilation and lighting must be suitable and comply with the hygiene and safety standards foreseen by current laws;
- the floor must be flat and compact to facilitate thorough cleaning;
- there must be no obstacles of any kind in the immediate vicinity of the machine that could effect the machine's normal ventilation.

In addition, the user must:

- make certain to keep children away from the machine when it is operating;
- adhere to the instructions in this manual.

- not remove or tamper with the safety devices on the machine;
- always pay careful attention to the work at hand and not use the machine when in a distracted state;
- perform all operations with maximum safety and calm;
- respect the instructions and warnings displayed on the machine labels.

The labels are accident prevention devices, and therefore must always be perfectly legible. If these should be damaged and illegible, it is mandatory to replace them by requesting replacements from the Manufacturer.

- At the end of each working shift, before cleaning, maintenance or transfer operations, disconnect electrical power.

WARNINGS FOR THE MAINTENANCE OPERATOR

- Observe the instructions indicated in this manual.
- Always use individual safety devices and other protection means.
- Before starting any maintenance operations, make sure that the kneading machine, it was used, is cooled down (electric motor).
- If any of the safety devices is worn or faulty, the kneading machine is also considered faulty and not to be used.

- Disconnect electrical power before intervening on electrical or electronic parts and connectors.

3 MOVEMENT AND TRANSPORT

The machine is provided complete with all of the necessary parts in a closed package attached to a wooden pallet with straps.

Be careful of the machine's tendency to topple.

The machine must be unloaded from the transport vehicle, lifting it with suitable equipment.

To transport the machine to its installation area, use a rolling cart with adequate load capacity.

During lifting operations, avoid sudden movements.

Make certain that the lifting means have a load capacity that is superior to the weight of the machine to be lifted.

The operator maneuvering the lifting equipment is responsible for lifting the load.

Leave a free space of approximately 50 cm around the kneading machine to facilitate use, cleaning and maintenance operations.

If the kneading machine is unstable due to irregularities in the floor, adjust the support feet or wheels using pieces of hard rubber.

For machines equipped with wheels, make sure that these are braked by pressing them down until the lever is blocked.

DANGER

- **Be careful that children do not play with the packaging materials (for example, plastic film and styrofoam). Suffocation danger!**

4 PREPARATION OF THE INSTALLATION AREA

4.1 SAFETY PRECAUTIONS

- Responsibility for operations executed in the location where the machine is installed is, and remains, of the user. The user is also responsible for execution of controls related to the installation of the machine.

  The user must adhere to all local, national and European safety regulations.

  The equipment must be installed on floors with adequate load capacity.

  The assembly and disassembly instructions for the kneading machine are reserved for specialized technicians.

  It is always recommended that users contact our assistance service for technical requests.

  If other technicians intervene, it is recommended to make certain of their skills.

Prior to starting machine assembly or disassembly, the installer must adhere to safety precautions in compliance with the law, and in particular must:

A) not operate in adverse conditions;

B) operate in perfect psycho/physical conditions and must check that the individual accident prevention devices are perfectly functional;

C) wear accident prevention gloves;

D) wear accident prevention footwear;

E) use tools that are electrically insulated;

F) make sure that the area used for assembly and disassembly is free of any obstacles.

4.2 MACHINE INSTALLATION LOCATION

The figure below illustrates the minimum distances that must be respected when positioning the machine to facilitate use, cleaning and maintenance of the kneading machine.

The minimum distance that must be respected between the kneading machine and surrounding walls or other machines must be approximately 50 cm.

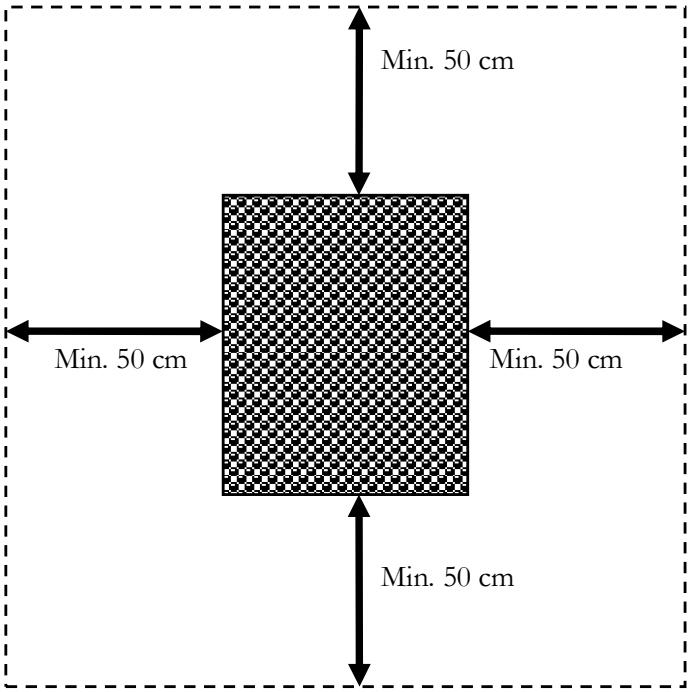

5 INSTALLATION

Installation must be executed by qualified personnel in compliance with local, national and European regulations.

5.1 KNEADING MACHINE LEVELLING

If the machine is unstable due to floor irregularity, adjust the support feet or wheels by inserting rubber pieces.

5.2 EQUIPMENT HOOK-UP

5.2.1 Electrical connection

It is sufficient to connect the power supply cable to the electrical mains power supply.

The electrical outlet must be easy to access, no moving should be necessary.

☞ **The electrical connection (plug) must be easily accessible, also following kneading machine installation**.

The distance between the machine and the socket must be adequate to not cause tension in the power supply cable. In addition, the cable must not be located beneath the machine support feet or wheel.

! **If the electrical power supply cable is damaged, it must be replaced by the technical assistance service or by a qualified technician to prevent any risks.**

5.2.1.1 Ground connection

DANGER

□ **It is mandatory that the electrical system is equipped with a ground connection and differential switch that comply with currently enforced laws**.

6 KNEADING MACHINE START-UP AND USE

6.1 COMMAND PANEL DESCRIPTION

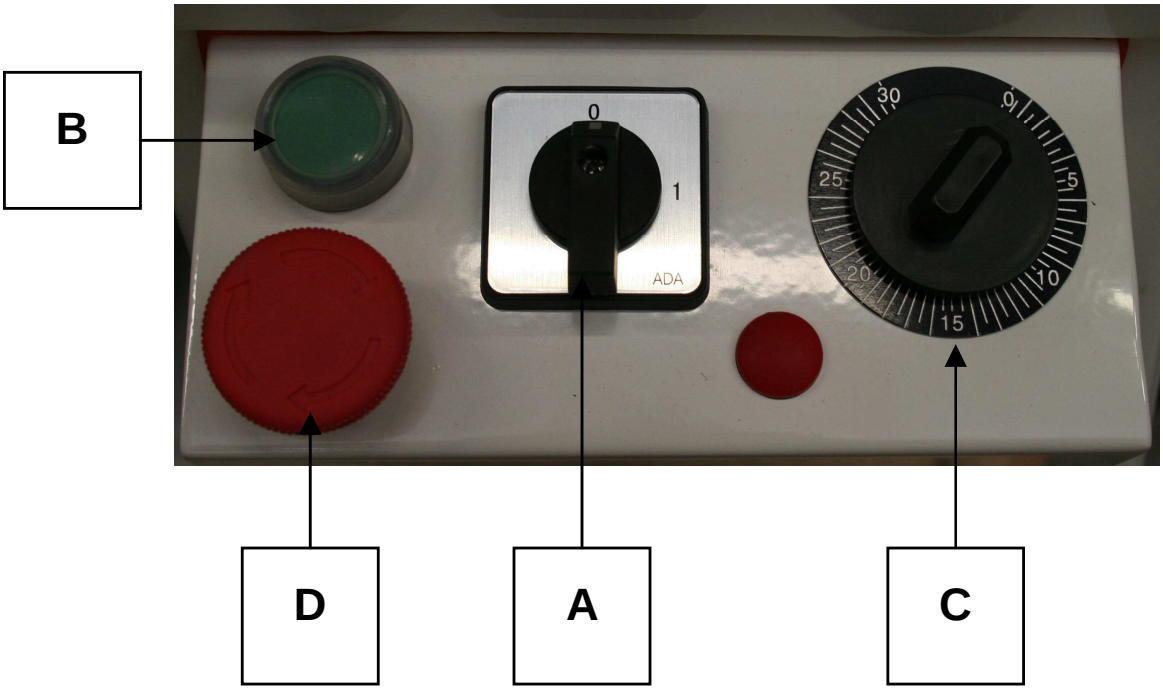

The panel consists of a main switch (**A**), a green start button (**B**), a timer (**C**), a red emergency stop button (**D**).

The panel permits start-up and stopping of the kneading machine, and regulates functioning and settings.

Legend:

A = Mainswitch (the 2V versions also allow speed selection)

B = Green start button

C = Timer

D = Red emergency stop button

6.2 START-UP PHASE

Connect the kneading machine to the electrical mains and turn the main switch **A** to the position "**1**". In the 2V versions, rotate the switch to the "1" or "2" position according to the desired speed.

Turn the timer knob **C** to the desired time from 0 to 30 min.

Press the green button **B** to start both the tank and the spiral.

6.3 WORKING PHASE

Prior to starting each work cycle, make sure that the machine is perfectly clean, especially the surface of the tank, the spiral and the dough breaker in contact with food products.
Whenever necessary, proceed with cleaning in accordance with the description in **chapter 7**.

After having lifted the protection **F**, pour the desired quantities of ingredients into the tank. Lower the

protection **F**, set the timer **C** at a defined time and press the green start button **B**.

The action created by the spiral, synchronized with tank rotation, obtains a mixture of flour, water, salt, yeast and other possible ingredients in the desired consistency.

If needed, to slightly modify the characteristics and/or consistency of the starter dough, pour the ingredients from the tank through the protection grating **F**.

Once the work cycle is completed, stop the machine by pressing the red emergency button **D**, lift the mobile protection to its maximum opening point, remove the dough from the tank and proceed with machine cleaning as described in **chapter 7**.

If kneading machine operations are stopped for any reason, wait at least 15 seconds before restarting.

Even though it is functionally identical to other versions, the machine with liftable head and removable tank is differentiated for easier removal of the dough at the end of the working cycle, as well as easier cleaning.

To lift the head and extract the tank, proceed as follows: stop the machine by pressing the red emergency button **D**; disconnect the plug from the electrical power supply; completely remove the mobile protection; horizontally pull the pin using the handle located on the right side of the machine until the head is released; lift the head using the lower piston; turn the disc located under the tank in a clockwise direction and extract the tank to remove the dough. After finishing machine cleaning, reassemble the tank by following the previously described steps in a backwards order, making sure that the pins beneath the tank are correctly inserted into the holes on the machine.

! Before removing the dough, always perform the shut-down steps described in **section 6.5**.

6.4 SAFETY DEVICES

The kneading machine is equipped with safety devices to protect the user, including a mobile protective grating and a device that ensures the grating is lowered. The kneading machines with liftable heads and removable tanks are also equipped with a device that checks whether the head is lifted or lowered, a blocking pin for the head in a lowered position, a device that checks whether the tank is inserted or removed and a tank blocking disc.

! Before proceeding with working phases, check the status of the various safety devices. These are in a good state when:

- the machine stops when the grating is lifted;
- the machine stops and will not start when the machine head is lifted;
- the machine stops and will not start when the tank is removed;
- when pulling the tank and the head slightly upwards, they remain blocked in their positions.

6.5 SHUT-DOWN PHASE

To shut down the kneading machine, press the red emergency button **D** and turn the main switch knob **A** to the position "**0**".

7 MAINTENANCE AND CLEANING

7.1 SAFETY PRECAUTIONS

! Before performing any maintenance operations, including cleaning, take the following precautions:

- make certain that the main switch is disinserted;
- make certain that the electrical power cannot be accidentally reinserted. Disconnect the plug from the electrical power socket;
- use individual protection devices in compliance with the directive 89/391/CEE;
- always operate using appropriate maintenance tools;

- once maintenance and repairs are finished, before starting up the kneading machine, reinstall all of the protection devices and reactivate all of the safety devices.

7.2 ORDINARY MAINTENANCE FOR THE USER

The kneading machine requires simple, frequent and careful cleaning to ensure efficient, regular functioning,

7.2.1 General cleaning

The machine must be cleaned at the end of each use, in compliance with the hygiene regulations and to safeguard machine operation.

Using a wooden or plastic spatula, proceed by removing dough residues, and then thoroughly clean the tank, spiral, dough breaker and mobile protection using a soft sponge and warm water. Dry with paper towels, and then pass over all of the aforementioned parts and the entire machine with a soft cloth and a disinfectant solution for use in food preparation areas.

! It is recommended to never use chemical products which are not specific for food preparation areas, abrasives or corrosives for any reason. Avoid by all means using water jets, tools, rough or abrasive instruments, such as steel wool, brillo sponges or any other item which could damage the surface of the machine, and especially those that could compromise health safety.

7.2.2 Upper chain tensioning

To maintain both performance and safety of the machine, it is indispensable to execute periodical controls of the upper chain tension. The chain should be tensioned if these controls detect excessive loosening of the chain, or if the spiral rotation is not constant.

Unscrew the screws and disassemble the panel located above the kneading machine head. Loosen the screws by a few turns that mount the spiral support and pull the spiral support until the chain is tensioned. Block the spiral support by tightening the screws and then reassemble and mount the panel.

7.2.3 Greasing the chains

Periodically grease the chains, one located in the upper interior of the head and the other located inside of the machine body.

Unscrew the screws and remove the panel over the head and the panel in the rear of the machine. Deposit a reasonable quantity of suitable grease inside of the chain and make sure to lubricate all of the chain links. Once finished, reassemble the two panel and tighten the screws.

8 POSSIBLE FAULTS

Fault	Cause	Remedy
The machine does not start	Lack of electrical energy	Check the main switch, socket, plug and power supply cable
	The emergency stop button is inserted	Turn the button in the direction indicated by the arrow
	The protection grating and/or the head are lifted	Correctly lower both the protective grating and the head
	The main switch knob is in position “0”	Turn the knob to position “1”
	The timer knob is in position “0”	Set the knob from 1 to 30 minutes
The spiral turns sporadically	The chain is loose	Tension the chain as described in section 7.2.2

9 INFORMATION FOR DEMOLITION AND DISPOSAL

Demolition and disposal of the machine is the sole responsibility of the owner, who must perform these tasks in compliance of currently enforced laws pertaining to safety and environmental protection in the country where the machine is installed.

Disassembly and disposal can also be performed by a third party, as long as an authorized entity for recovery and demolition of the materials in question.

☞ **INSTRUCTION**: *always adhere to the currently enforced laws pertaining to disposal of materials and in the country where the machine is installed , and any possible necessity for registration of demolition*.

! **WARNING**: *All disassembly operations for demolition must take place with the machine shut-down and disconnected from the electrical power supply.*

- *remove all electrical apparatus;*
- *separate the accumulators on the electronic cards;*
- *dispose of the machine structure through authorized entities;*

! **WARNING**: *Abandoning the machine in accessible areas constitutes grave danger for persons and animals*.

Responsibility for possible damages to persons and animals is falls exclusively on the owner.

USER INFORMATION

The equipment falls under application of the European Directives 2002/95/CE, 2002/96/CE, 2003/108/CE which states to never dispose of this product together with normal domestic waste. To prevent any possible damage to the environment or to human health, please keep this product separately from other waste so it can be recycled safely from an environmental point of view.

For more information about collection centers please contact the town office or the dealer you bought the product from.

10 ELECTRICAL SYSTEM

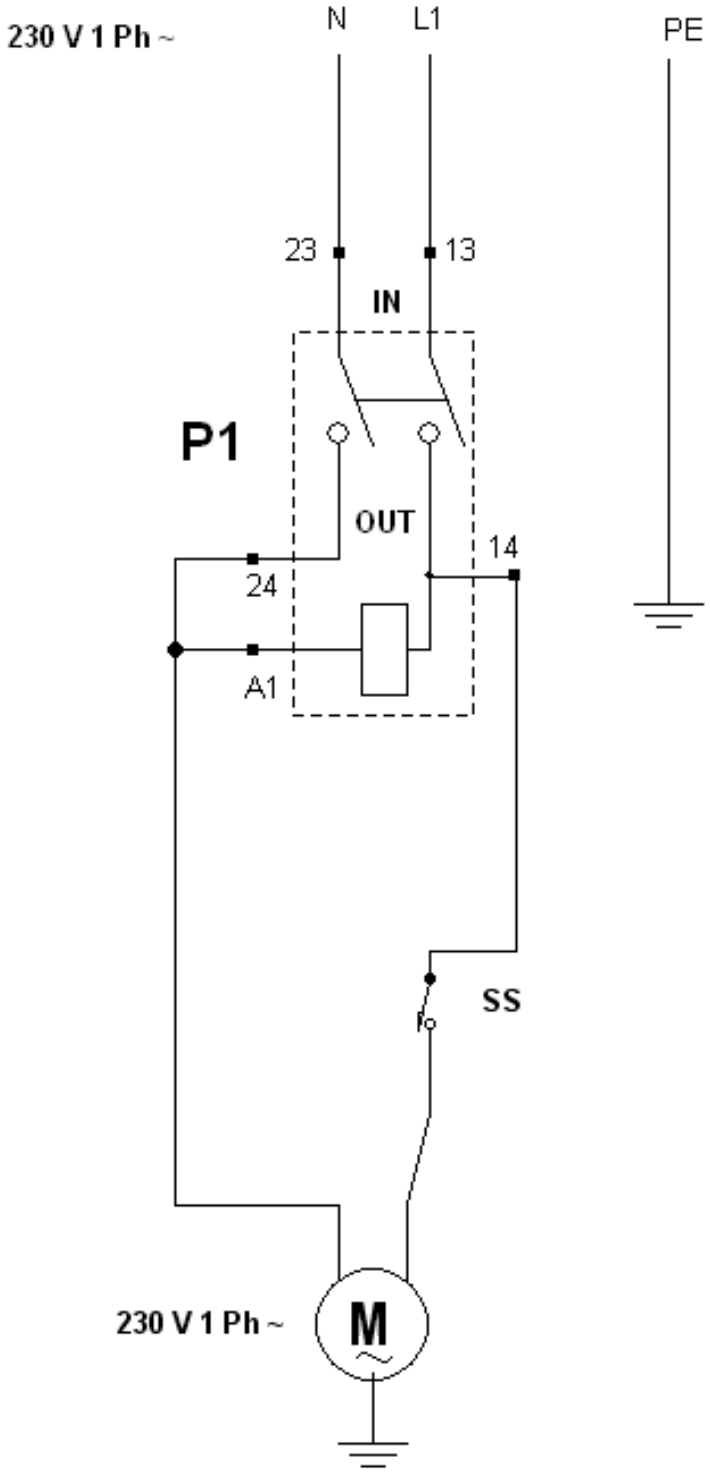

IFM 7-10-15

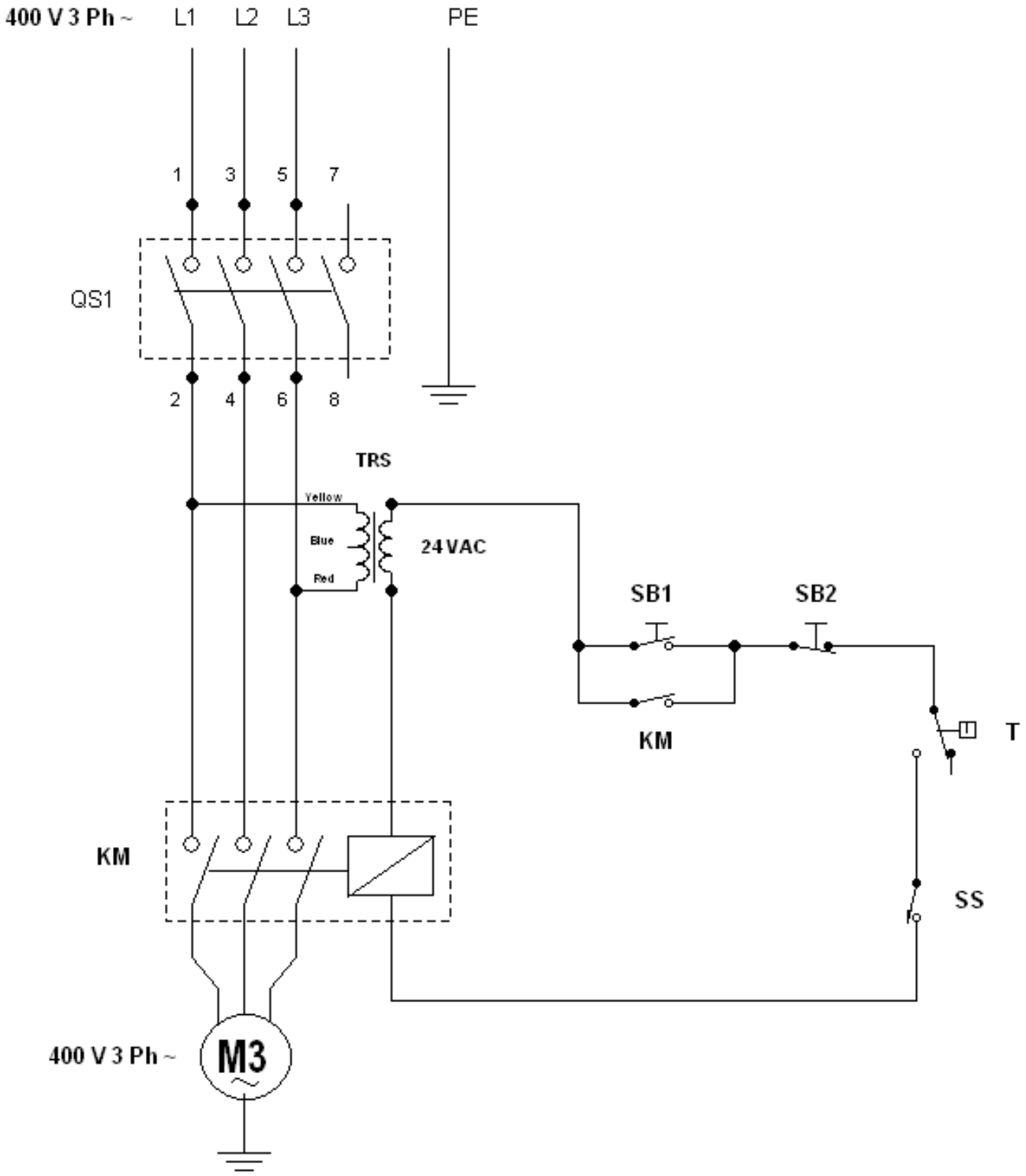

IF 17-22-33-42-53

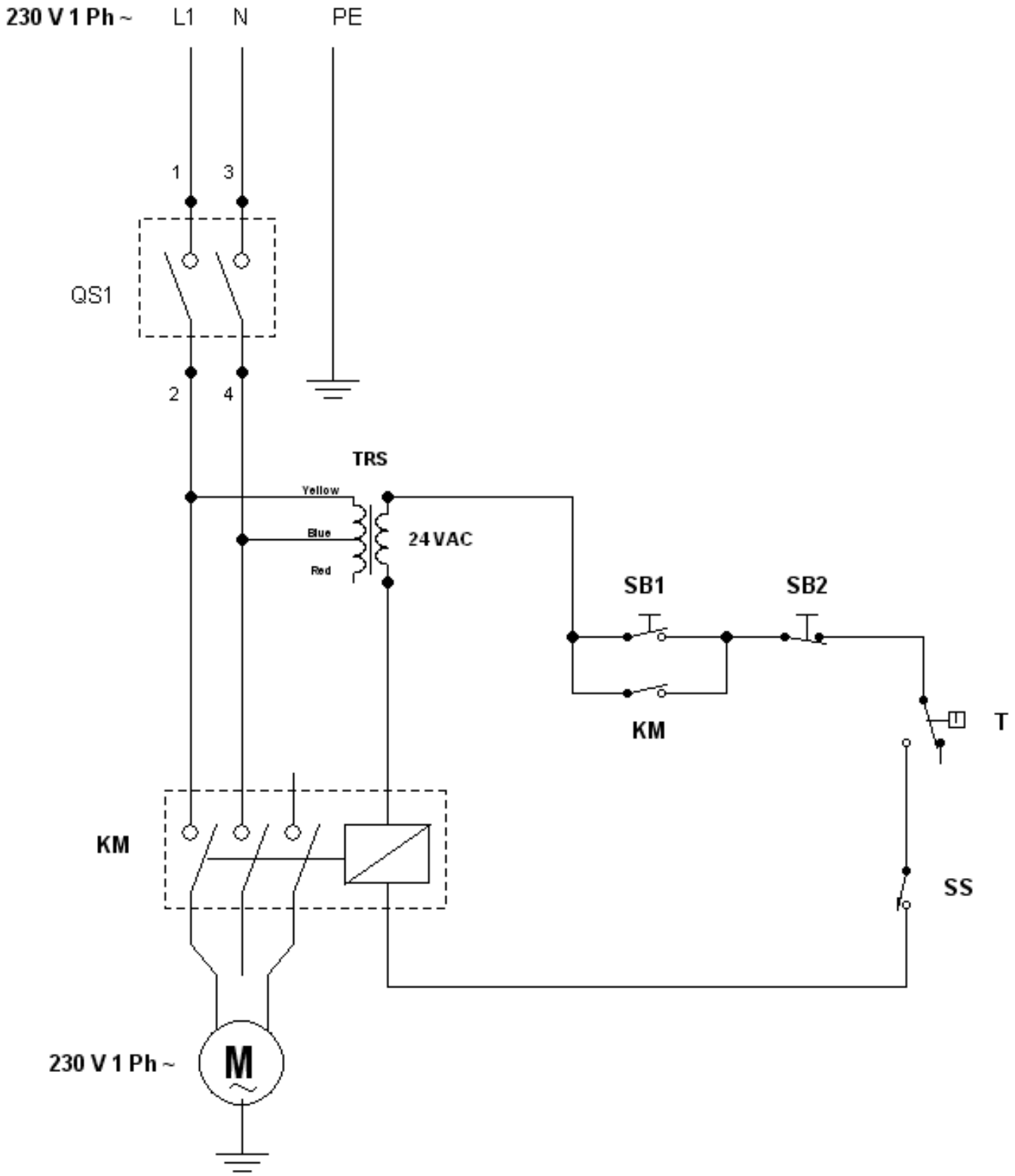

IFM 17-22-33-42-53

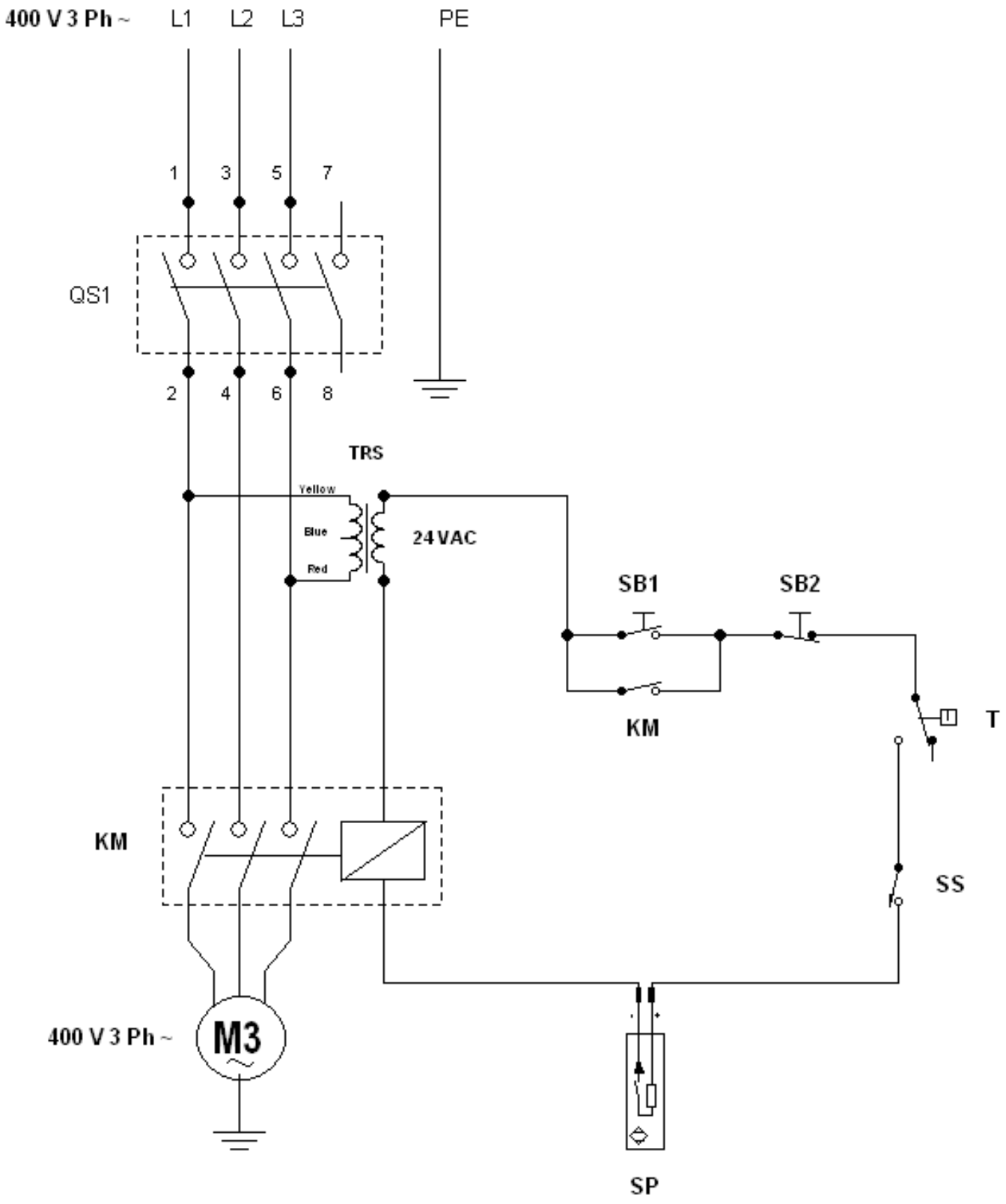

IR 17-22-33-42-53

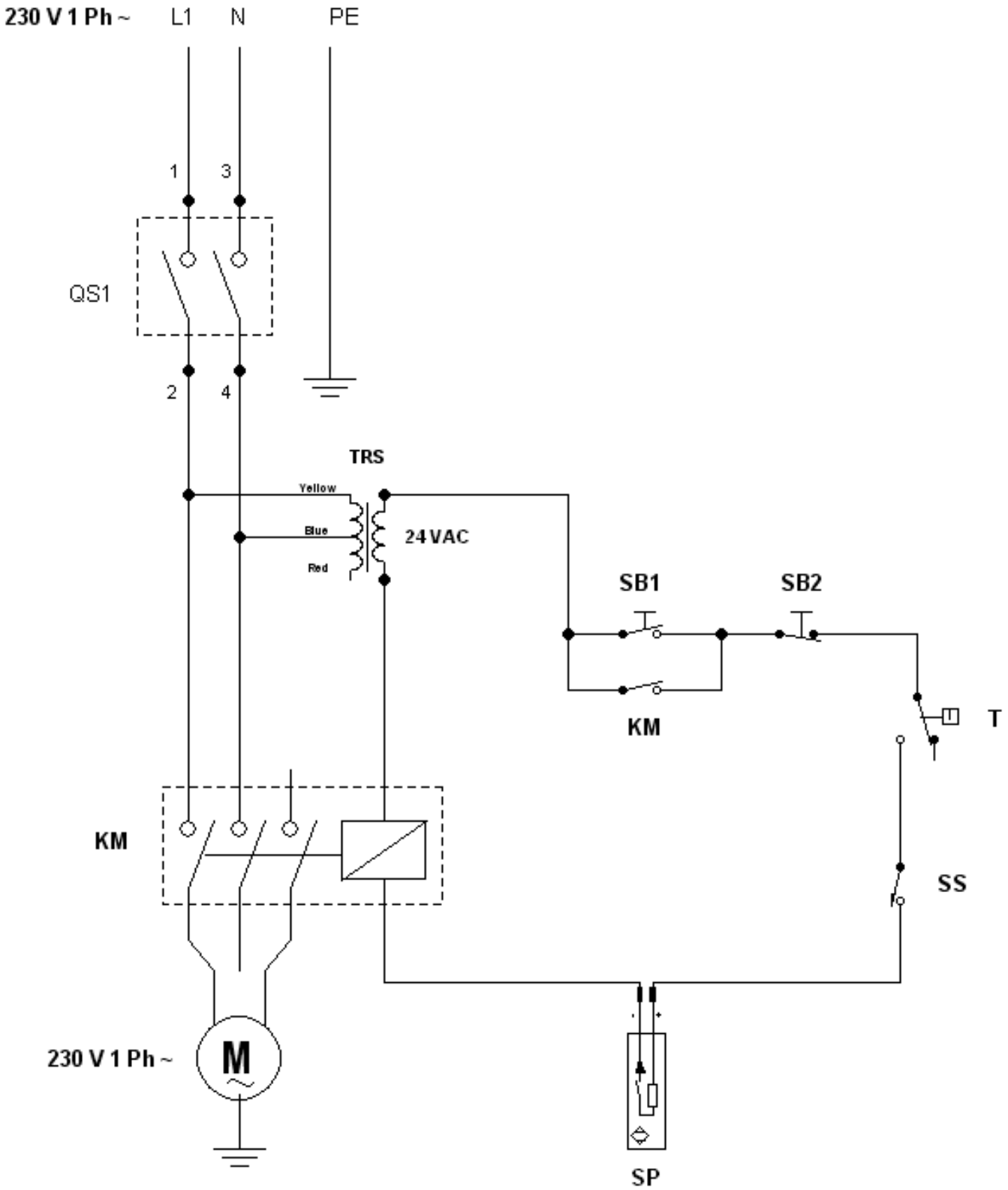

IRM 17-22-33-42-53

Legend	
GS	Main switch
T	Transformer
PT	Motor Thermal Protection
SP	Proximity sensor
SS	End of emergency limit
SB2	Stop Button
SB1	Starter Button
KM	Switch
M	Motor

11 EXPLODED DIAGRAM AND SPARE PARTS LIST

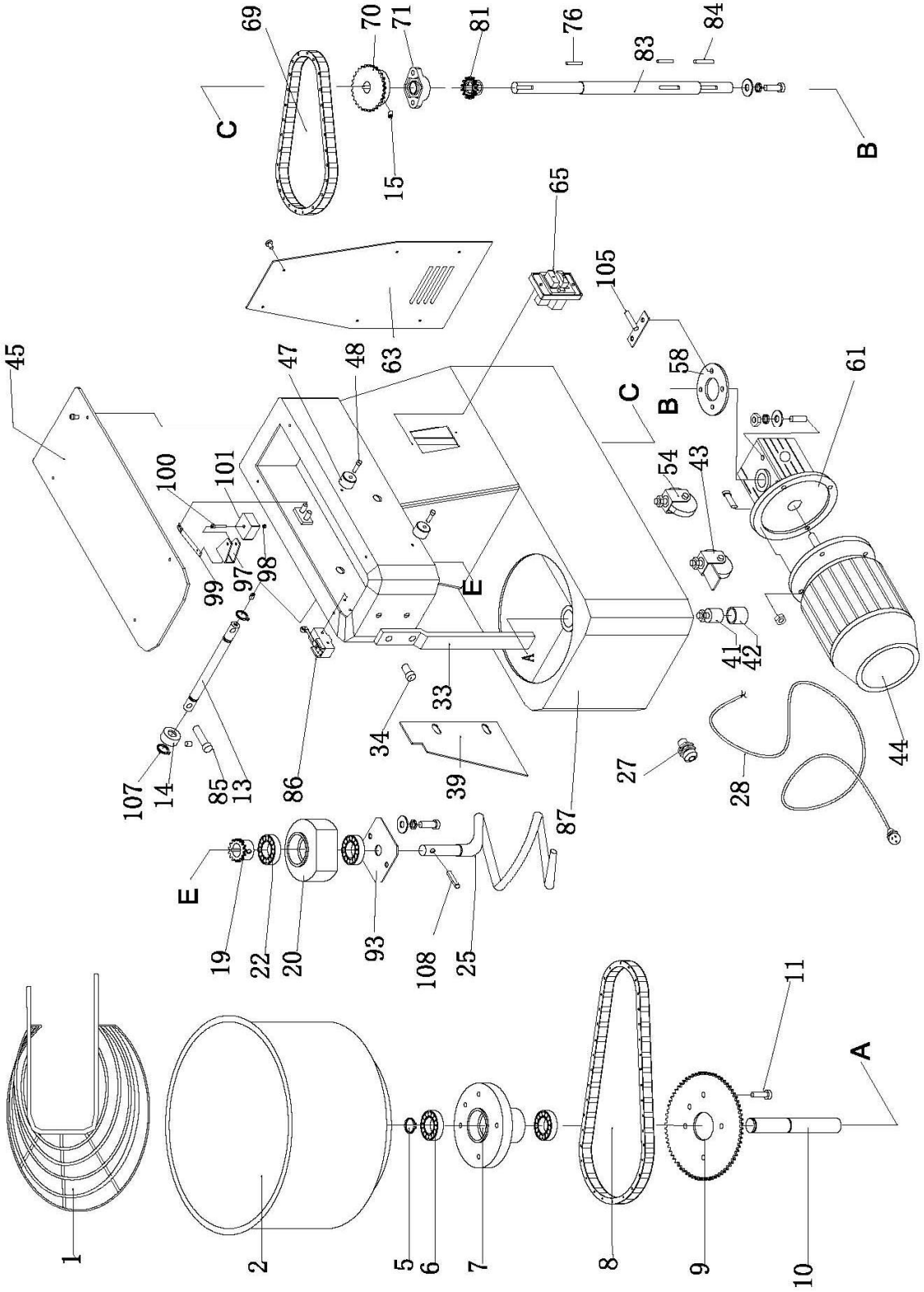

IFM7 – IFM10 – IFM15

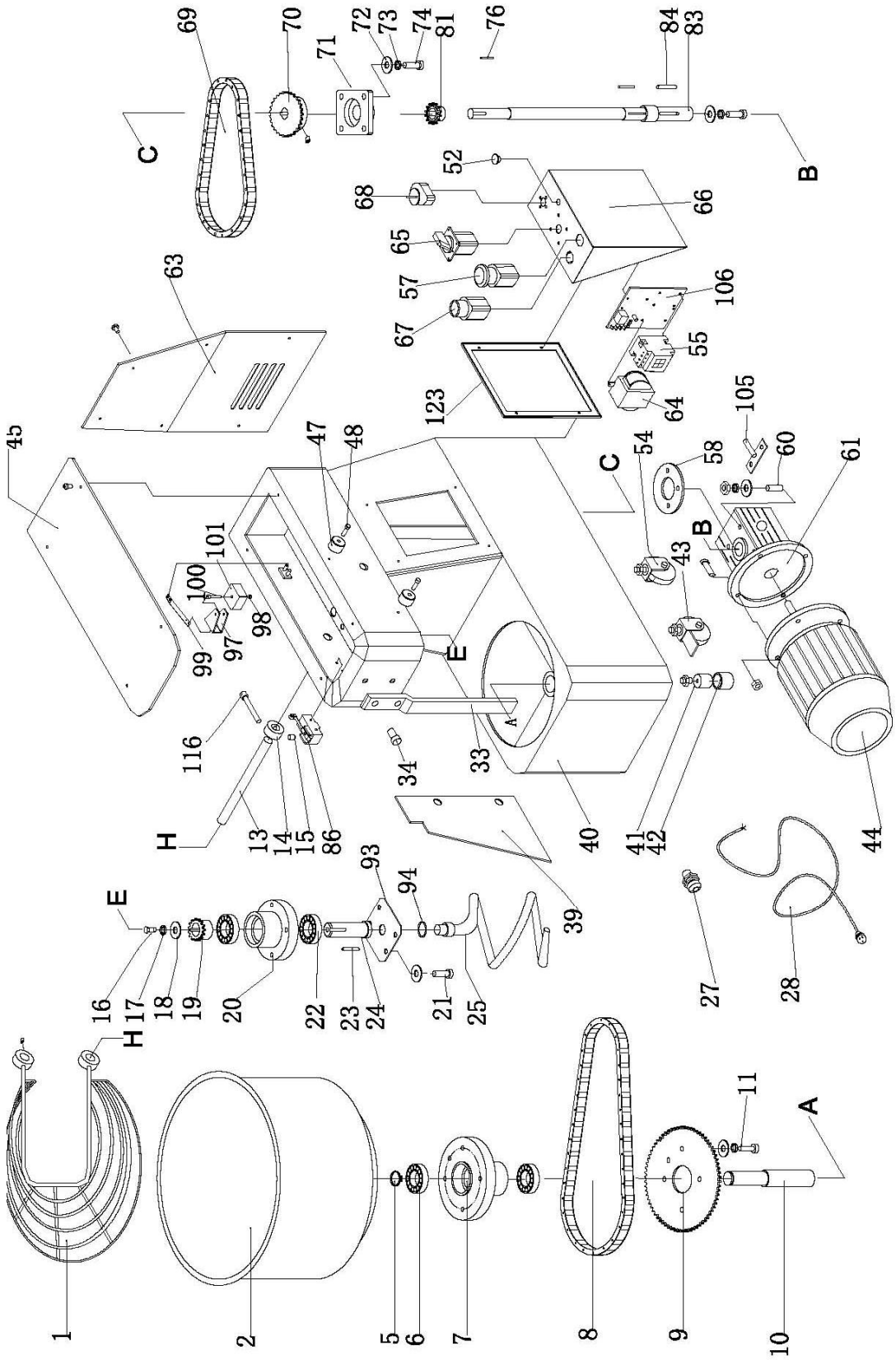

IF17-IF22-IF33-IF42-IF53-IFM17-IFM22-IFM33

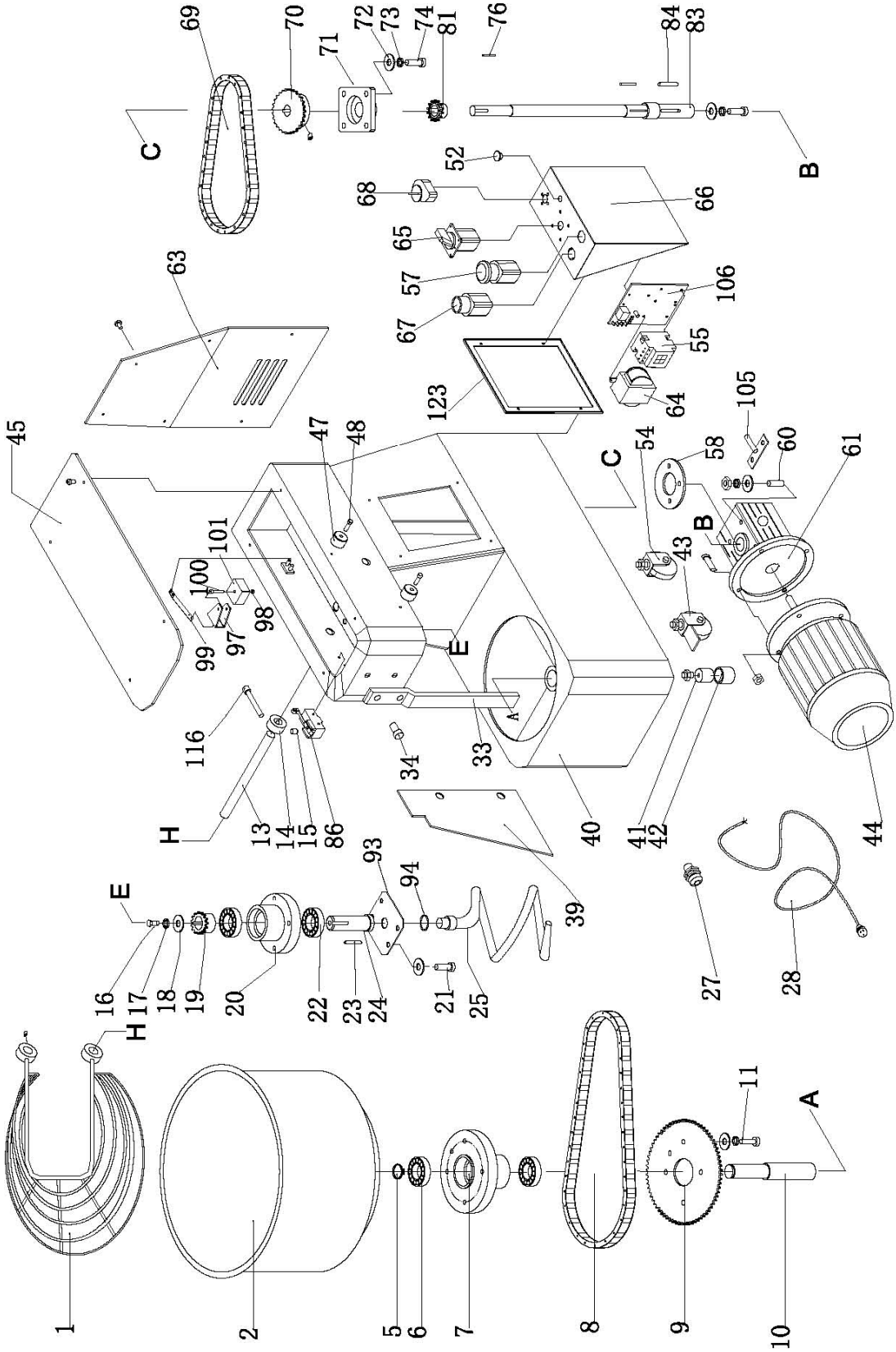

IR17 - IR22 - IR33 - IR42 - IR53 - IRM17 - IRM22

Diamond catering equipment

MOD.	TFM7	TFM10	TFM15	TF17	TR17	TF22	TR22	TF33	TR33	TF42	TR42	TF53	TR53
POS.	-	-	-	-	-	-	-	-	-	-	-	-	-
1	8303000	8305180	8303400	8300000	8300000	8300010	8300010	8300020	8300020	8300030	8300030	8300040	8300040
2	8303010	8303290	8303410	8300050	8300050	8300060	8300060	8300070	8300070	8300080	8300080	8300090	8300090
3	-	-	-	-	8300100	-	8300100	-	8300100	-	8300100	-	8300100
4	-	-	-	-	8300140	-	8301760	-	8300150	-	8300160	-	8300170
5	8303020	8303020	8303020	8300180	8300180	8300180	8300180	8300180	8300180	8300180	8300180	8300180	8300180
6	8303030	8303030	8303030	8300190	8300190	8300190	8300190	8300190	8300190	8300190	8300190	8300190	8300190
7	8308530	8308530	8308530	8300200	8300200	8300200	8300200	8300200	8300200	8300200	8300200	8300200	8300200
8	8303040	8303040	8303040	8300210	8300210	8300210	8300210	8300220	8300220	8300220	8300220	8300220	8300220
9	8303050	8303050	8303050	8300230	8300230	8300230	8300230	8300240	8300240	8300240	8300240	8300240	8300240
10	8303060	8303060	8303060	8300250	8300250	8300250	8300250	8300250	8300250	8300250	8300250	8300250	8300250
11	8300310	8300310	8300310	8300310	8301740	8300310	8301740	8300310	8301740	8300310	8301740	8300310	8301740
12	-	-	-	-	8301280	-	8301280	-	8301280	-	8301280	-	8301280
13	8308540	8308540	8308540	8300260	8300260	8300260	8300260	8300270	8300270	8300270	8300270	8300270	8300270
14	8300370	8300370	8300370	8300370	8302090	8300370	8302090	8300370	8302090	8300370	8302090	8300370	8302090
15	-	-	-	8300280	8300280	8300280	8300280	8300280	8300280	8300280	8300280	8300280	8300280
16	-	-	-	8300380	8300380	8300380	8300380	8300380	8300380	8300380	8300380	8300380	8300380
17	-	-	-	8300390	8300390	8300390	8300390	8300390	8300390	8300390	8300390	8300390	8300390
18	-	-	-	8300400	8300400	8300400	8300400	8300400	8300400	8300400	8300400	8300400	8300400
19	8308550	8308550	8308550	8300410	8300410	8300410	8300410	8300420	8300420	8300420	8300420	8300420	8300420
20	8308520	8308520	8308520	8301480	8301480	8301480	8301480	8301490	8301490	8301490	8301490	8301490	8301490
21	-	-	-	8300290	8300290	8300290	8300290	8300290	8300290	8300290	8300290	8300290	8300290
22	8303070	8303070	8303070	8300190	8300190	8300190	8300190	8301550	8301550	8301550	8301550	8301550	8301550
23	-	-	-	8301530	8301530	8301530	8301530	8301540	8301540	8301540	8301540	8301540	8301540
24	-	-	-	8300460	8300460	8300460	8300460	8300470	8300470	8300470	8300470	8300470	8300470
25	8303100	8308500	8308500	8300480	8300480	8300480	8300480	8300490	8300490	8300490	8300490	8300490	8300490
26	-	-	-	-	8300500	-	8300500	-	8300500	-	8300500	-	8300500
27	8300510	8300510	8300510	8300510	8300510	8300510	8300510	8300510	8300510	8300510	8300510	8300510	8300510
28	8301500	8301500	8301500	8300520	8300520	8300520	8300520	8300520	8300520	8300520	8300520	8300520	8300520
29	-	-	-	-	-	-	-	-	-	-	-	-	-
30	-	-	-	-	-	-	-	-	-	-	-	-	-
31	-	-	-	-	8300350	-	8300350	-	8300360	-	8300360	-	8300360
32	-	-	-	-	8300320	-	8300320	-	8300320	-	8300320	-	8300320
33	8303150	8303310	8303370	8301210	8301210	8302010	8302010	8301220	8301220	8301230	8301230	8301240	8301240
34	8303130	8303130	8303130	8300610	8300610	8300610	8300610	8300610	8300610	8300610	8300610	8300610	8300610
35	-	-	-	-	8301160	-	8301160	-	8301160	-	8301160	-	8301160
36	-	-	-	-	8301170	-	8301170	-	8301180	-	8301180	-	8301180
37	-	-	-	-	8301190	-	8301190	-	8301190	-	8301190	-	8301190
38	-	-	-	-	8301200	-	8301200	-	8301200	-	8301200	-	8301200
39	8303140	8303300	8303280	8301640	8301140	8301750	8302150	8301650	8301150	8601660	8301620	8301670	8301630
40	-	-	-	-	8301100	-	8301100	-	8301110	-	8301110	-	8301110
41	8301560	8301560	8301560	8301560	8301560	8301560	8301560	8301560	8301560	8301560	8301560	8301560	8301560
42	8301340	8301340	8301340	8301340	8301340	8301340	8301340	8301340	8301340	8301340	8301340	8301340	8301340
43	8301570	8301570	8301570	8301570	8301570	8301570	8301570	8301570	8301570	8301570	8301570	8301570	8301570
44	8303170	8301800	8301800	8300530	8300530	8300530	8300530	8300530	8300530	8300540	8300540	8300540	8300540
45	8303180	8303180	8303180	8300900	8300900	8300900	8300900	8300910	8300910	8300910	8300910	8300910	8300910
46	-	-	-	-	8300920	-	8300920	-	8300930	-	8300930	-	8300930
47	8301270	8301270	8301270	8301270	8301270	8301270	8301270	8301270	8301270	8301270	8301270	8301270	8301270
48	8301260	8301260	8301260	8301260	8301260	8301260	8301260	8301260	8301260	8301260	8301260	8301260	8301260
49	-	-	-	-	8301250	-	8301250	-	8301250	-	8301250	-	8301250
50	-	-	-	-	8301380	-	8301380	-	8301380	-	8301380	-	8301380
51	-	-	-	-	8301000	-	8301000	-	8301010	-	8301010	-	8301010
52	-	-	-	-	8301020	-	8301020	-	8301020	-	8301020	-	8301020
53	-	-	-	8301520	8301520	8301520	8301520	8301520	8301520	8301520	8301520	8301520	8301520
54	8301580	8301580	8301580	8301580	8301580	8301580	8301580	8301580	8301580	8301580	8301580	8301580	8301580
55	-	-	-	8301090	8301090	8301090	8301090	8301090	8301090	8301090	8301090	8301090	8301090
56	-	-	-	-	-	-	-	-	-	-	-	-	-
57	-	-	-	8301050	8301050	8301050	8301050	8301050	8301050	8301050	8301050	8301050	8301050
58	8303210	8303360	8303360	8301590	8301590	8301590	8301590	8301590	8301590	8301600	8301600	8301600	8301600
59	-	-	-	-	-	-	-	-	-	-	-	-	-
60	-	-	-	8300340	8300340	8300340	8300340	8300340	8300340	8300340	8300340	8300340	8300340
61	8303220	8308570	8308570	8300590	8300590	8300590	8300590	8300590	8300590	8300600	8300600	8300600	8300600

62					8300890		8300890		8300890		8300890		8300890
63	8303190	8303340	8303340		8300940		9300940		8300950		8300950		8300950
64				8301350	8301350	8301350	8301350	8301350	8301350	8301350	8301350	8301350	8301350
65	8308560	8308560	8308560	8301310	8301310	8301310	8301310	8301310	8301310	8301310	8301310	8301310	8301310
66				8301040	8301040	8301040	8301040	8301040	8301040	8301040	8301040	8301040	8301040
67				8301060	8301060	8301060	8301060	8301060	8301060	8301060	8301060	8301060	8301060
68				8301080	8301080	8301080	8301080	8301080	8301080	8301080	8301080	8301080	8301080
69	8303230	8303380	8303330	8300870	8300870	8301680	8301680	8300880	8300880	8301690	8301690	8301700	8301700
70	8303240	8303240	8303240	8300850	8300850	8300850	8300850	8300860	8300860	8300860	8300860	8300860	8300860
71	8303250	8303250	8303250	8300830	8300730	8300830	8300730	8300840	8300740	8300840	8300740	8300840	8300740
72				8300630	8300630	8300630	8300630	8300630	8300630	8300630	8300630	8300630	8300630
73				8300620	8300620	8300620	8300620	8300620	8300620	8300620	8300620	8300620	8300620
74				8301710	8302140	8301710	8302140	8301710	8302140	8301710	8302140	8301710	8302140
75					8300790		8300790		8300800		8300800		8300800
76	8300450	8300450	8300450	8300450	8300450	8300450	8300450	8300450	8300450	8300450	8300450	8300450	8300450
77					8300660		8300660		8300660		8300660		8300660
78					8300770		8300770		8300780		8300780		8300780
79					8300640		8300640		8300640		8300640		8300640
80					8300830		8300830		8300840		8300840		8300840
81	8300710	8300710	8300710	8300710	8300710	8300710	8300710	8300720	8300720	8300720	8300720	8300720	8300720
82					8300450		8300450		8300450		8300450		8300450
83	8303260	8303390	8303390	8301900	8300670	8301900	8300670	8301910	8300680	8301920	8302170	8301920	8302170
84	8303270	8303270	8303270	8300650	8300650	8300650	8300650	8300650	8300650	8300650	8300650	8300650	8300650
85	8303120	8303120	8303120										
86	8300990	8300990	8300990	8300990		8300990		8300990		8300990		8300990	
87	8303160	8303320	8303320										
88													
89													
90													
91													
92					8302070		8302070		8302070		8302070		8302070
93	8303080	8303080	8303080	8301980	8301980	8301980	8301980	8302030	8302030	8302030	8302030	8302030	8302030
94					8302080		8302080		8302080		8302080		8302080
95					8302100		8302100		8302160		8302160		8302160
96					8302110		8302110		8302110		8302110		8302110
97	8301940	8301940	8301940	8301940	8301940	8301940	8301940	8301940	8301940	8301940	8301940	8301940	8301940
98	8301990	8301990	8301990	8301990	8301990	8301990	8301990	8301990	8301990	8301990	8301990	8301990	8301990
99	8301930	8301930	8301930	8301930	8301930	8301930	8301930	8301930	8301930	8301930	8301930	8301930	8301930
100	8302000	8302000	8302000	8302000	8302000	8302000	8302000	8302000	8302000	8302000	8302000	8302000	8302000
101	8301950	8301950	8301950	8301950	8301950	8301950	8301950	8301950	8301950	8301950	8301950	8301950	8301950
102				8301120	8302120	8301120	8302120	8301130	8302120	8302040	8302120	8302040	8302120
103				8300960	8302130	8300960	8302130	8300970	8302130	8300970	8302130	8300970	8302130
104					8300300		8300300		8300300		8300300		8300300
105	8303200	8303350	8303350	8301970	8301970	8301970	8301970	8301970	8301970	8302050	8302050	8302050	8302050
106				8301960	8301960	8301960	8301960	8301960	8301960	8301960	8301960	8301960	8301960
107	8303110	8303110	8303110										
108	8303090	8303090	8303090										
109													
110													
111													
112													
113													
114													
115													
116				8300330		8300330		8300330		8300330		8300330	

TFM ÷TRM

POS.				TFM17	TRM17	TFM22	TRM22	TFM33	TRM33	TFM42	TRM42	TFM53	TRM53
28				8301500	8301500	8301500	8301500	8301500	8301500	8301500	8301500	8301500	8301500
44				8300550	8300550	8300550	8300550	8300550	8300550	8300560	8300560	8300560	8300560
55				8301095	8301095	8301095	8301095	8301095	8301095	8301095	8301095	8301095	8301095
64				8301360	8301360	8301360	8301360	8301360	8301360	8301360	8301360	8301360	8301360
65				8301390	8301390	8301390	8301390	8301390	8301390	8301390	8301390	8301390	8301390

106				8302060	8302060	8302060	8302060	8302060	8302060	8302060	8302060	8302060	8302060
TFM ÷TRM UK													
POS.				TFM17	TRM17	TFM22	TRM22	TFM33	TRM33	TFM42	TRM42	TFM53	TRM53
28				8301510	8301510	8301510	8301510	8301510	8301510	8301510	8301510	8301510	8301510
44				8300550	8300550	8300550	8300550	8300550	8300550	8300560	8300560	8300560	8300560
55				8301095	8301095	8301095	8301095	8301095	8301095	8301095	8301095	8301095	8301095
64				8301360	8301360	8301360	8301360	8301360	8301360	8301360	8301360	8301360	8301360
65				8301390	8301390	8301390	8301390	8301390	8301390	8301390	8301390	8301390	8301390
106				8302060	8302060	8302060	8302060	8302060	8302060	8302060	8302060	8302060	8302060
TF 2V ÷ TR 2V													
POS.				TF17 2V	TR17 2V	TF22 2V	TR22 2V	TF33 2V	TR33 2V	TF42 2V	TR42 2V	TF53 2V	TR53 2V
44				8300570	8300570	8300570	8300570	8300570	8300570	8300580	8300580	8300580	8300580
65				8301320	8301320	8301320	8301320	8301320	8301320	8301320	8301320	8301320	8301320

12 TECHNICAL DATA

model	power		voltage	machine dimensions	weight	dough weight	bowl capacity	mixing time	bowl dimension ø x h
	Kw	Hp	V	lxpxh	kg	kg	lt	kg	cm
IFM7	0,180	0,24	230	27x50x50	36	6	7	24	24x16
IFM10	0,368	0,50	230	28x54x55	42	8	10	30	26x20
IFM15	0,370	0,50	230	32x60x58	50	10	15	40	30x21
IFM17	0,736	1,00	230	36x67x68	73,5	12	17	48	32x21
IFM22	0,736	1,00	230	40x69x68	76	18	22	70	35x21
IFM33	1,103	1,50	230	46x80x76	109	25	33	100	40x26
IF17	0,750	1,00	400	36x67x68	73,5	12	17	48	32x21
IF22	1,100	1,50	400	40x69x68	76	18	22	70	35x21
IF33	1,100	1,50	400	46x80x76	109	25	33	100	40x26
IF42	2,000	2,70	400	49x83x76	113	38	42	140	45x26
IF53	2,000	2,70	400	52x86x76	116	44	53	170	50x26
IRM17	0,736	1,00	230	36x67x68	84	12	17	48	32x21
IRM22	0,376	1,00	230	40x69x68	89	18	22	70	35x21
IR17	0,750	1,00	400	36x67x68	84	12	17	48	32x21
IR22	1,100	1,50	400	40x69x68	89	18	22	70	35x21
IR33	2,000	2,70	400	46x80x76	120	25	33	100	40x26
IR42	2,000	2,70	400	49x83x76	127	38	42	140	45x26
IR53	2,000	2,70	400	52x86x76	130	44	53	170	50x26

03-2010