09/2018

Mod: TOP50NC/R2

Production code: UF50GCP-P

Diamond
catering equipment

Model:

UF50G – UF100G
UF50GCP–UF100GCP

Users manual

UK Contents

Important safety instructions	**7**
Unpacking and installation	**7**
Electrical connection	**7**
Start-up of the cabinet	**8**
Thermostat	**8**
Defrosting	**8**
Light	**9**
Lock	**9**
Maintenance and cleaning	**9**
Service	**10**
Disposal	**10**

UK

Important safety instructions

1. To obtain full use of the cabinet, we recommend reading this instruction manual.
2. It is the user's responsibility to operate the appliance in accordance with the instructions given.
3. Contact your dealer immediately in case of any malfunctions.
4. Place the cabinet in a dry and ventilated place.
5. Keep the cabinet away from strongly heat-emitting sources and do not expose it to direct sunlight.
6. Always keep in mind that all electrical devices are sources of potential danger.
7. Do not store inflammable material such as thinner, gasoline etc. in the cabinet.
8. We declare that no asbestos nor any CFC are used in the construction.
9. The oil in the compressor does not contain PCB.

Unpacking and installation

Carefully examine the cabinet for shipping damage before discarding the packing material. If any damage is found, contact the delivery carrier immediately and have his agent prepare an inspection report for the purpose of registering a claim.
THIS IS YOUR RESPONSIBILITY.

Electrical connecting

The cabinet operates on 230 V/50 Hz.

The wall socket should be easily accessible.

All earthing requirements stipulated by the local electricity authorities must be observed. The cabinet plug and wall socket should then give correct earthing. If in doubt, contact your local supplier or authorized electrician.

The flexible cord fitted to this appliance has three cores for use with a 3-pin 13-Amp or 3-pin 15-Amp plug. If a B.S. 1363 (13-Amp) fused plug is used, it should be fitted with a 13-Amp fuse.

The wires in this mains lead are coloured in accordance with the following code:
Green/Yellow: Earth, Blue: Neutral, Brown: Live.

The main electrical connections must be done by skilled electricians.

Start-up of the cabinet

Before use, we recommend that the cabinet is cleaned, see the section on maintenance and cleaning.

Important !
If the cabinet has been vertically placed during transport, please wait 2 hours before starting up the cabinet.

2 distance pieces are included for mounting on the back of the freezer. These ensure that the freezer is sufficiently ventilated. They should be fitted in the predrilled holes as shown on the photo.

Thermostat

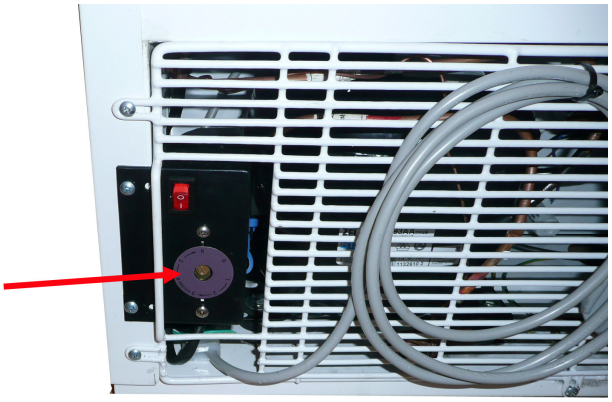

The temperature can be adjusted by using the thermostat button at the back of the cabinet.
Set to position 5 on the thermostat scale. Place a thermometer approx. 10 cm inside the cabinet on the top shelf and check the temperature once it has achieved steady conditions. Turn the thermostat button clockwise if the temperature is too high or anti-clockwise of the temperature is too low.

Defrosting

A layer of frost gradually forms inside the cabinet. When the layer is 3 mm thick it should be scraped off using a plastic scraping implement, and removed from the cabinet without switching off. The cabinet is then ready for use again. If the cabinet is dirty inside, it should be switched off at the mains so the layer of frost can melt before cleaning commences.

Light

The freezer is equipped with a switch for the internal light at the back of the cabinet.

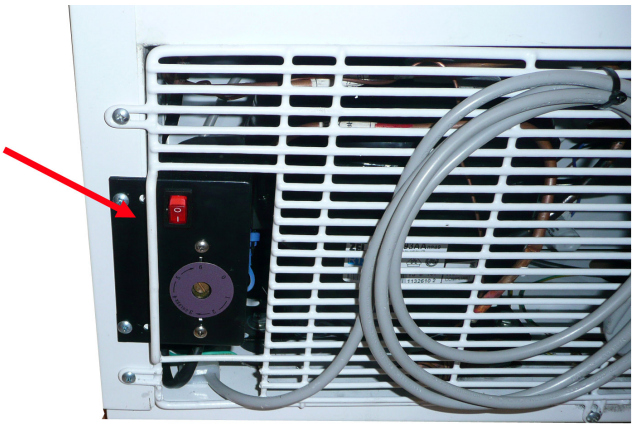

Lock

The freezer is supplied with a lock in the door.

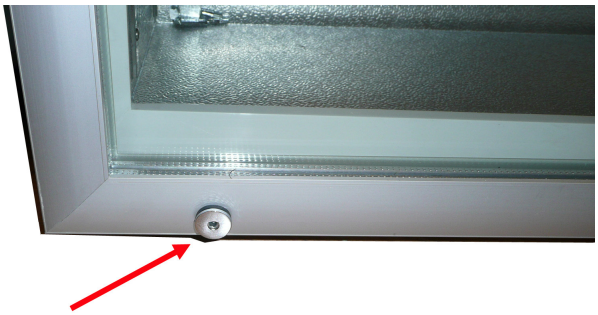

Maintenance and cleaning

Switch the freezer off at the socket.

The cabinet must be periodically cleaned. Clean the external and internal surfaces of the cabinet with a light soap solution and subsequently wipe dry.

Do NOT use cleansers containing chlorine or other harsh cleansers, as these can damage the surfaces and the internal cooling system.

Clean the condenser and the compressor compartment using a vacuum cleaner and a stiff brush.

Do NOT hose the compressor compartment with water as this can cause short circuits and damage on the electrical parts.

Service

The cooling system is a hermetically sealed system and does not require supervision, only cleaning.

If the cabinet fails to cool, check if the reason is a power cut.

If you cannot locate the reason to the failure of the cabinet, please contact your supplier. Please inform model and serial number of the cabinet. You can find this information on the rating label which is placed inside the cabinet in the top right hand side.

Disposal

Disposal of the cabinet must take place in an environmentally correct way. Please note existing regulation on disposal. There may be special requirements and conditions which must be observed.

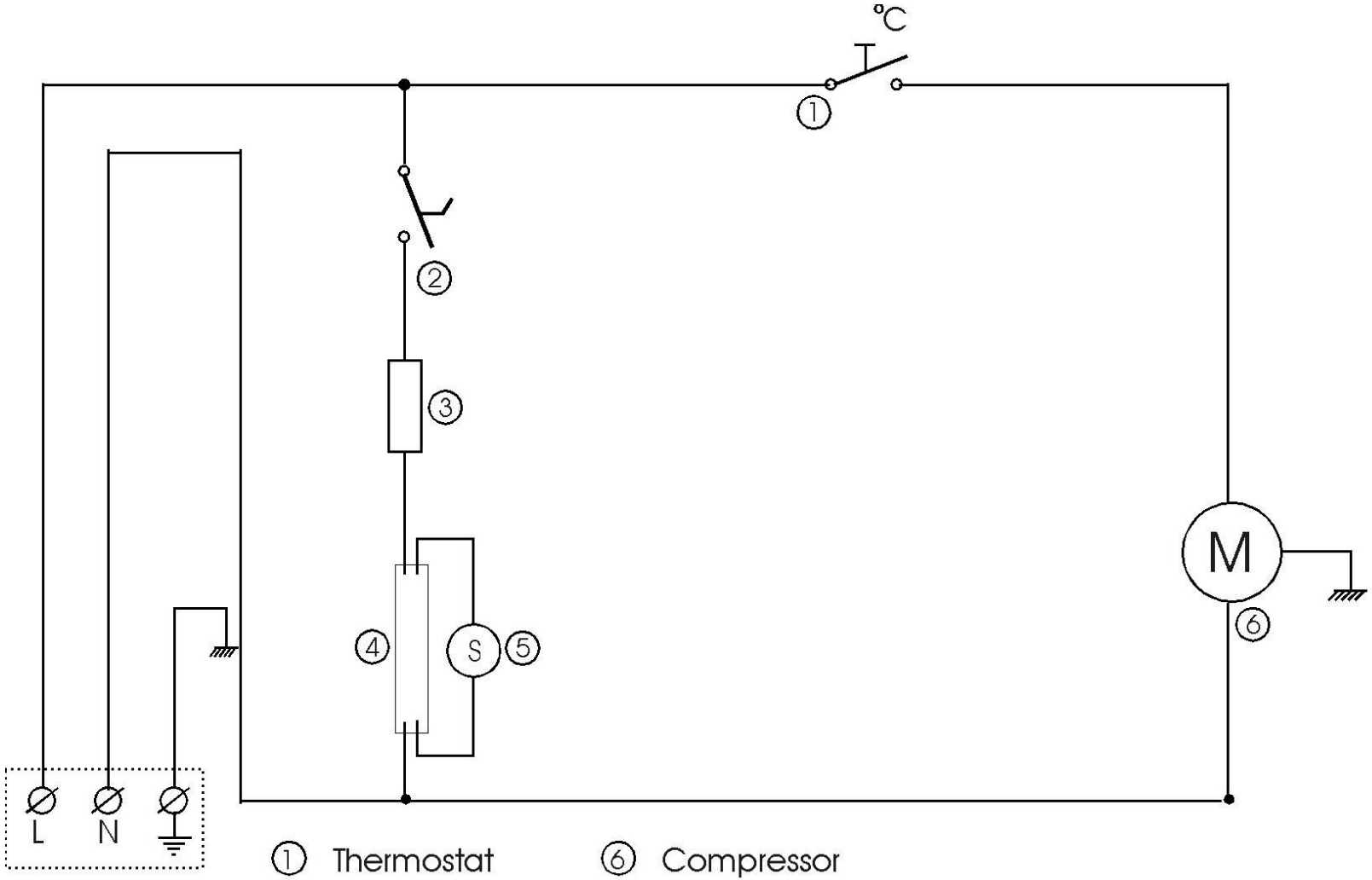

1. Thermostat
2. Light switch
3. Ballast
4. Neon lamp
5. Neon starter
6. Compressor

UF50G/UF100G
Electrical system
303-090402

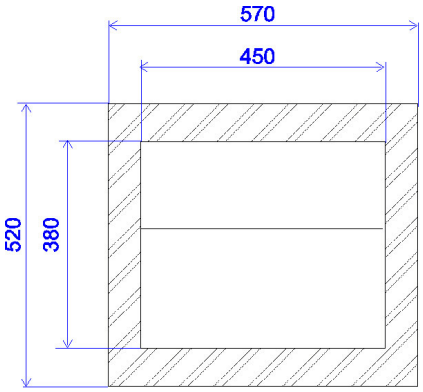
570
450
520
380

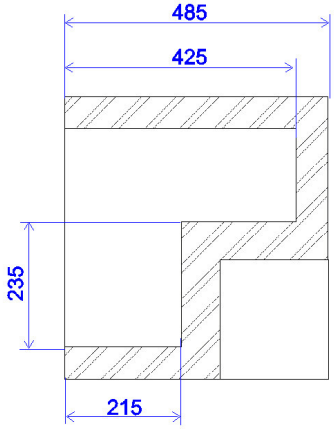
485
425
235
215

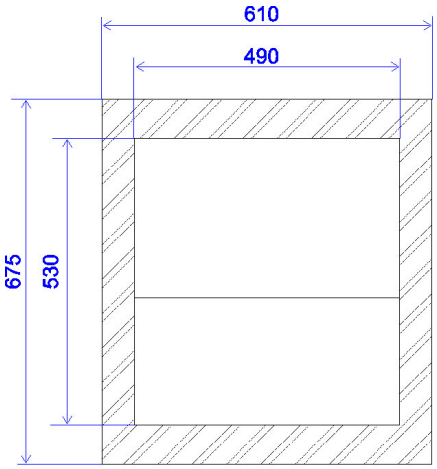
610
490
675
530

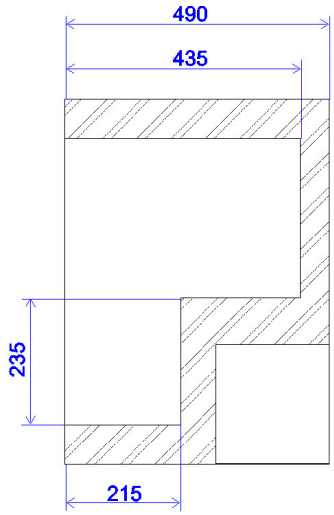
490
435
235
215