Diamond

MOD : BSC3/35-10

Production code : CPWplus 35

03/2026

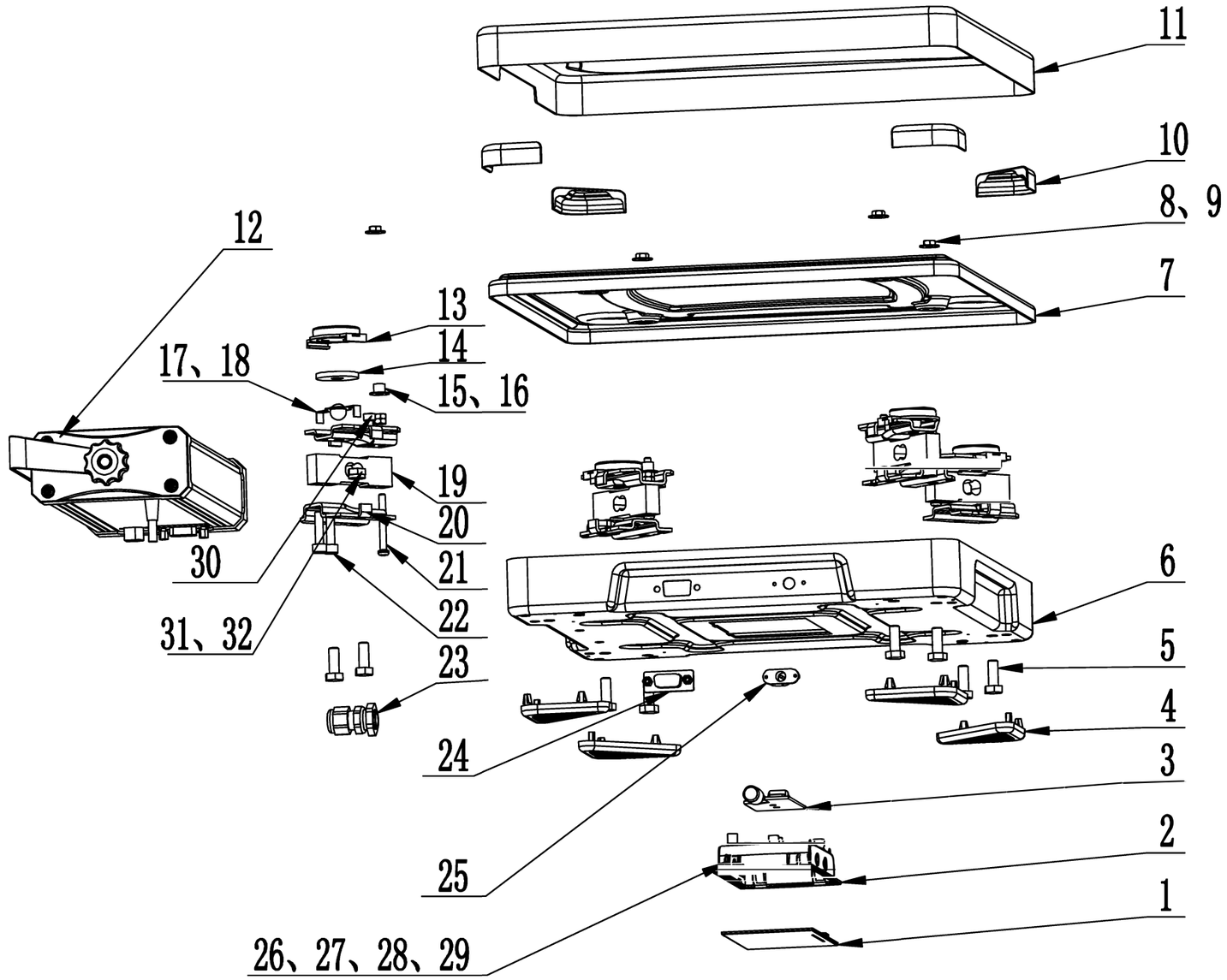

NO.	Item	Specifications
32	spring washer	Φ6
31	nut	M6
30	screw	4*16PMO
29	-+ battery piece	
28	+- battery piece	
27	- battery piece	
26	+ battery piece	
25	power socket	DC-020
24	RS 232 male connector	D-9P
23	connector	PG7
22	screw	4*16HMO
21	screw	4*35HMO(黑)
20	load cell bracket	
19	load cell	
18	steel ball	Φ10
17	steel ball support	FH-61
16	flat washer	Φ4
15	tube mat	
14	steel ball cap lid	FH-60
13	steel ball cap	
12	indicator	
11	top pan	
10	mat for top pan	
9	flat washer	Φ4 (D∮12)
8	nut	M4
7	pan support	
6	base	
5	screw	6*16HMO
4	foot pad	
3	PCB for cable	
2	battery compartment	
1	battery cover	

					Name: Exploded view
	QTY		signature	date	part number:
design					
					material:
					tolerance: *--key dimension see the data sheet below for other dimension tolerance

Diamond

projection	grade mark	PCS.	proportion
third angle projection			
page:		version: 1.	

route: —

tolerance ref.	dimL (R) (MM)	>0.5-6	>6-30	>30-120	>120-400	>400-1000	>1000-2000	>2000-4000
		±0.1	±0.3	±0.5	±0.7	±1	±1.2	±2