MOD : WR-ROTI-SK

Production code : NHK4 (BLUE)_

01/2026

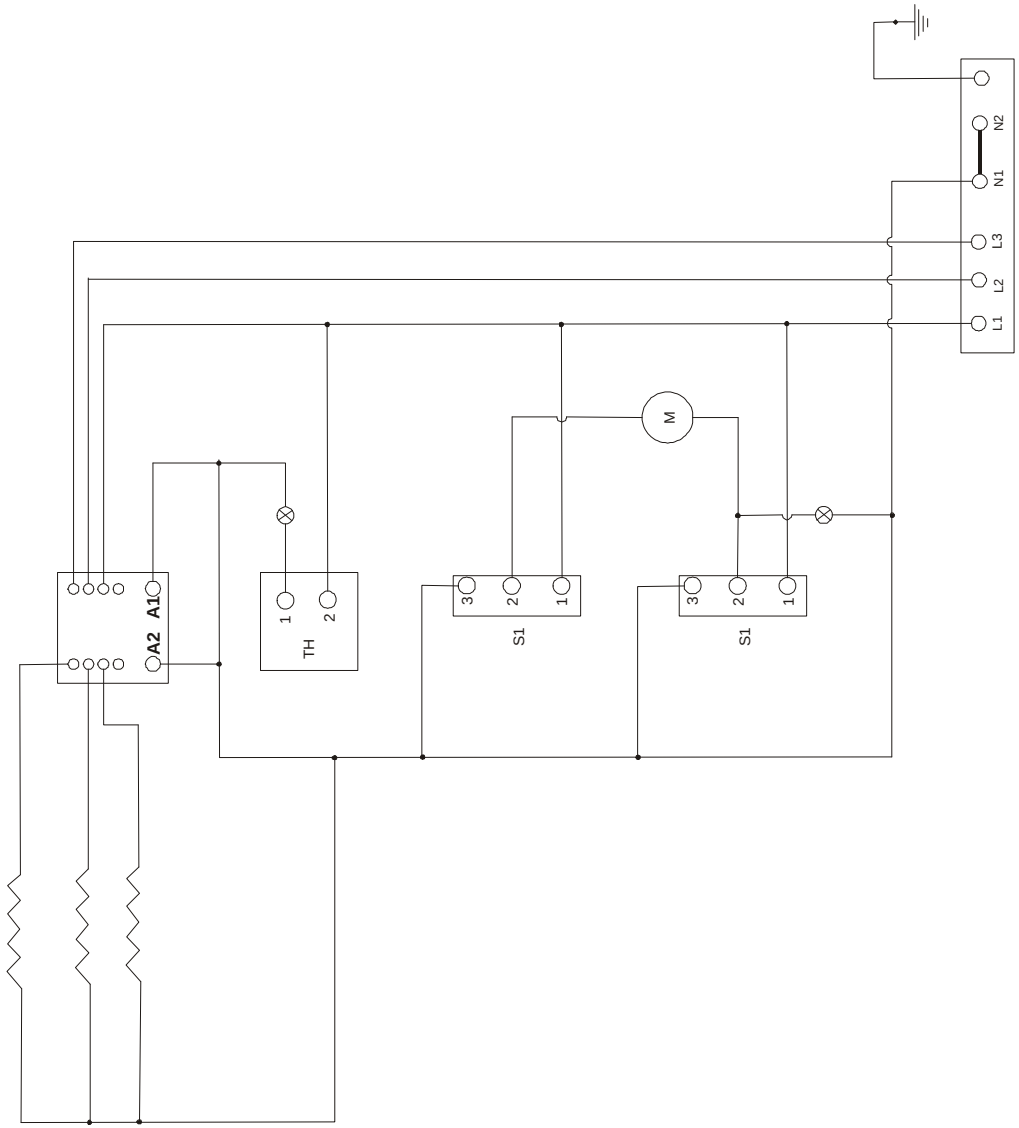

		CHIKEN PLANITARY ROASTER	DATE 22/06/2007			
Diverso®		ELECTRIC DIAGRAM INTERNAL CONNECTION				
		MODEL : WR-ROTI-SK			No1	