Diamond

MOD : CW2001-MT

Production code : R01B1020236

12/2025

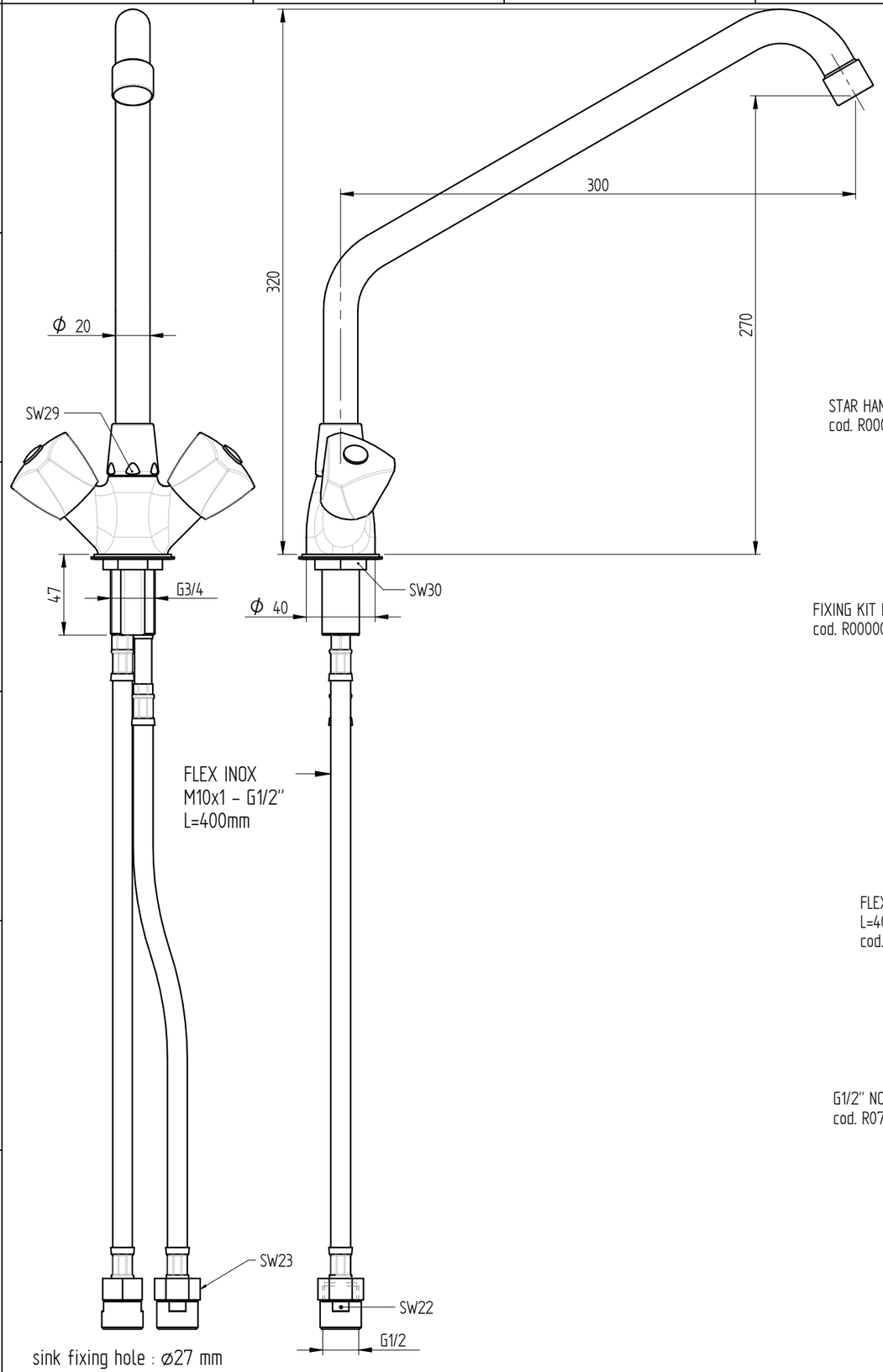

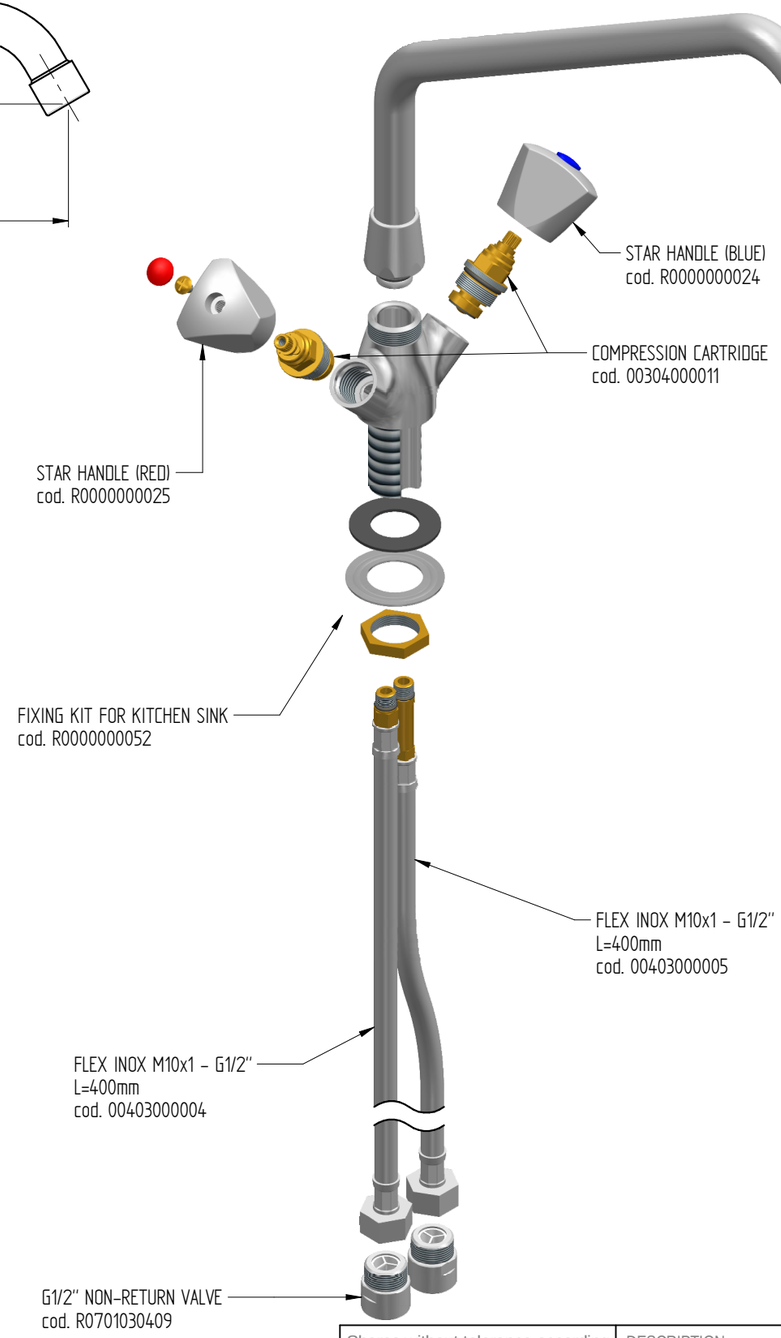

FLOW RATE : 16 L/min at 3,5 BAR

Shares without tolerance according to standard **UNI-EN-22768-1-m**	DESCRIPTION ONE HOLE SINK TAP WITH STAR HANDLES, "C" PIPE ø 20x300, NON-RETURN VALVES	CODE CW2001-MT
SIZE A3 — European Projection		WEIGHT 1,34 Kg
DATE 27-03-2023	SCALE 1:3	

Diamond

DONE WITH DESIGN CAD - PROHIBITED THE CHANGES MANUAL

Rev. 00