Diamond

MOD : CW2001-MT

Production code : R01B1020236

02/2026

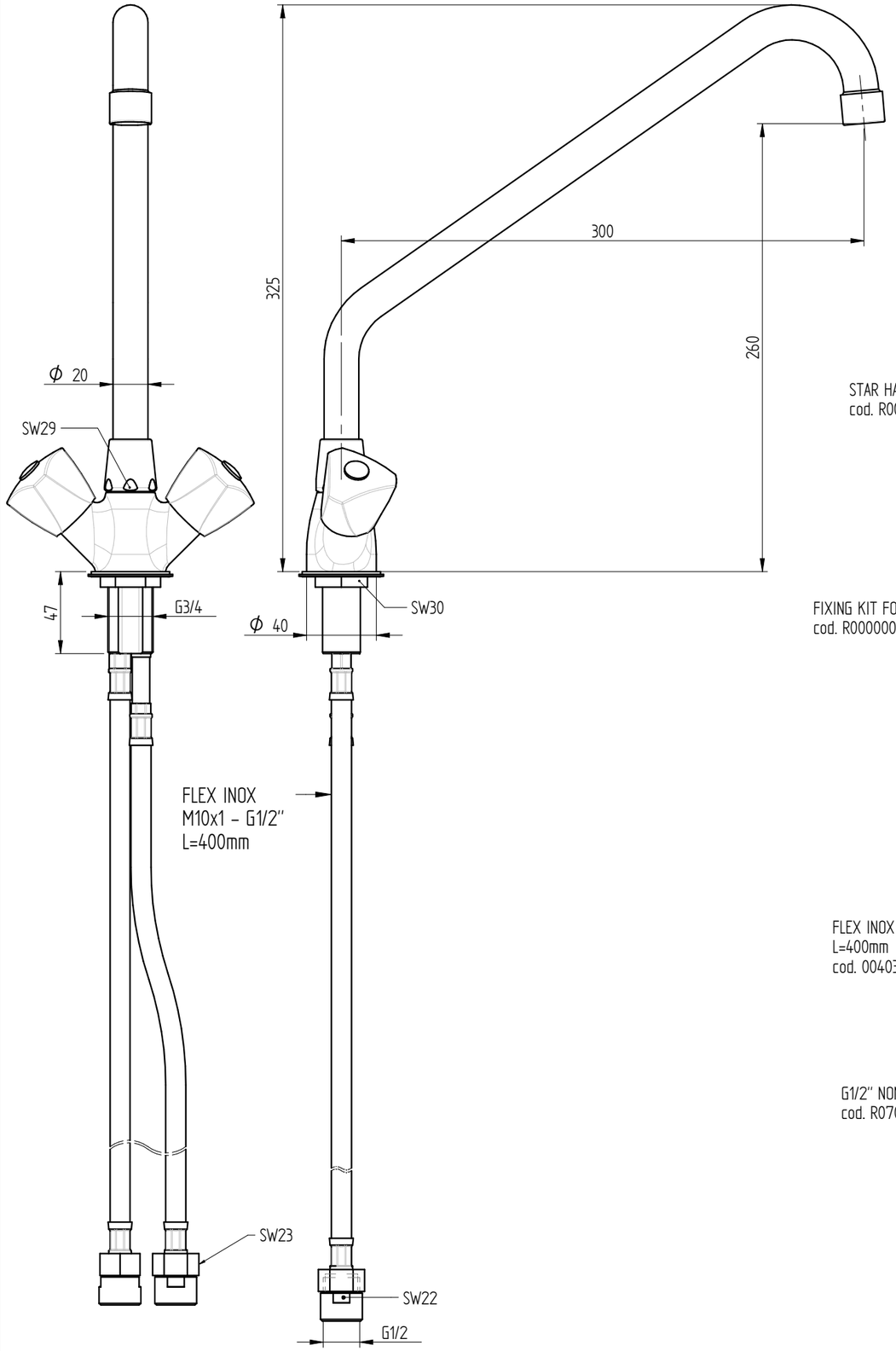

sink fixing hole : ⌀27 mm

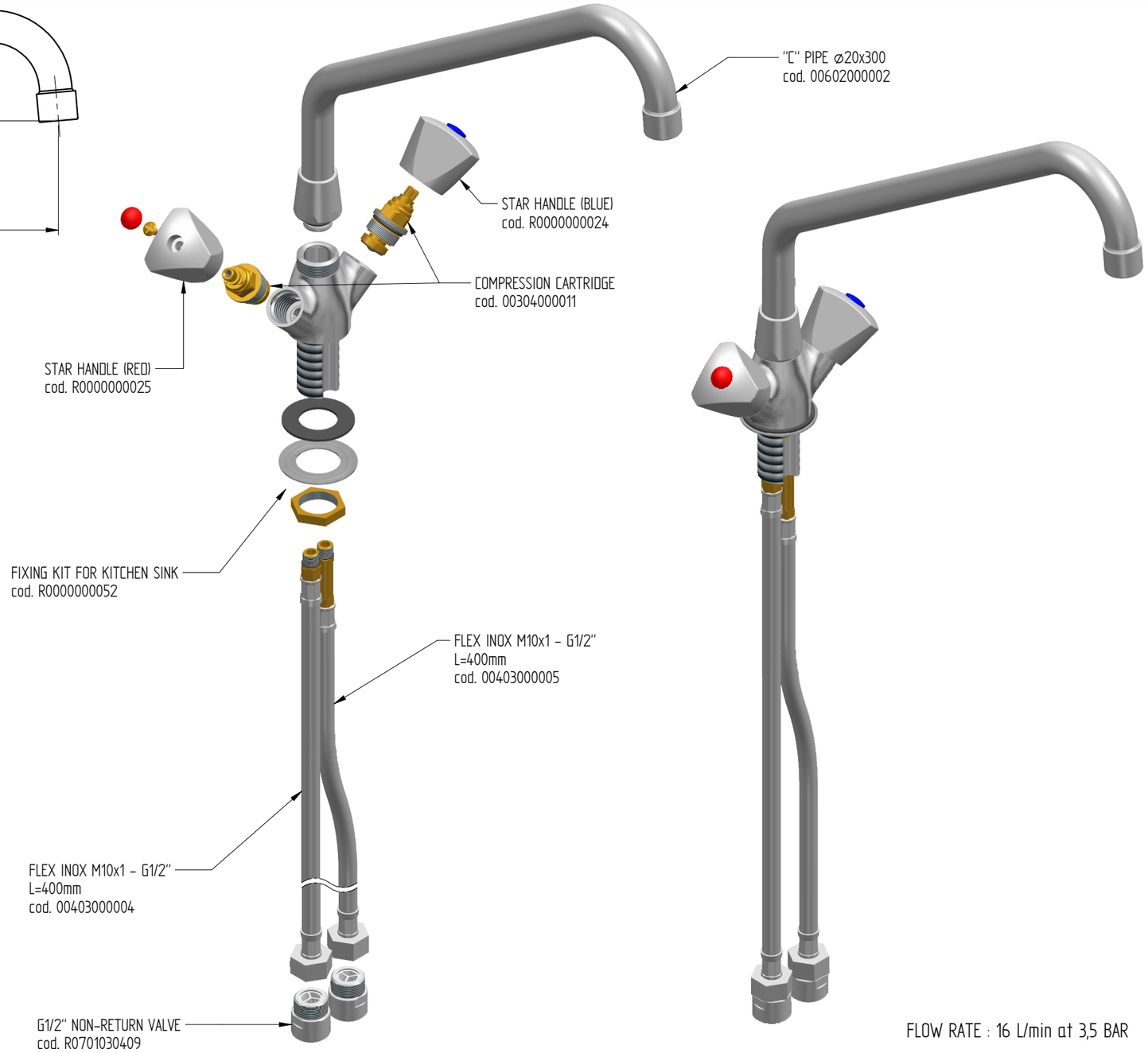

FLOW RATE : 16 L/min at 3,5 BAR

Shares without tolerance according to standard **UNI-EN-22768-1-m**	DESCRIPTION ONE HOLE SINK TAP WITH STAR HANDLES, "C" PIPE ⌀ 20x300, NON-RETURN VALVES	CODE CW2001-MT	
SIZE A3	European Projection	WEIGHT 1,34 Kg	
DATE **01-02-2026**	SCALE 1:3		

Diamond

DONE WITH DESIGN CAD - PROHIBITED THE CHANGES MANUAL