Diamond

MOD : CW8003-MT

Production code : R01B1020237

02/2026

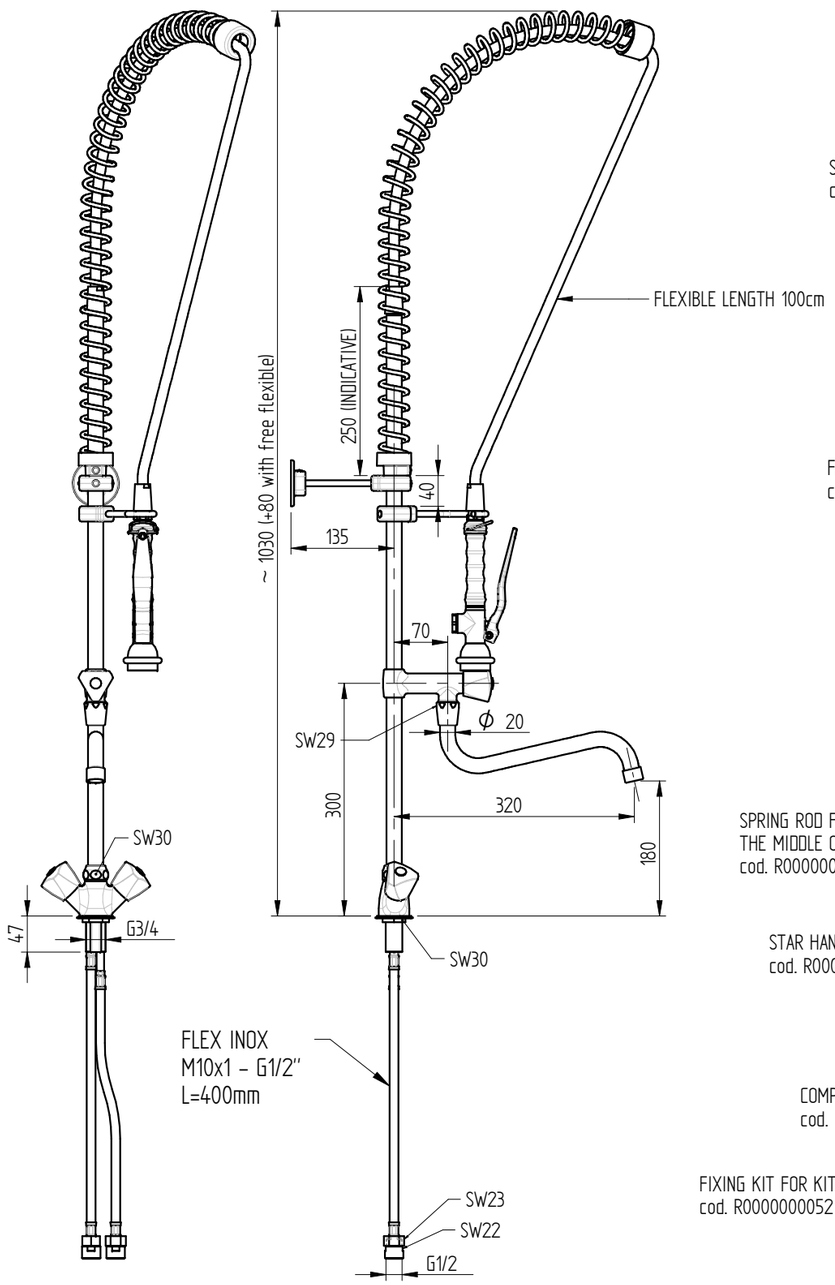

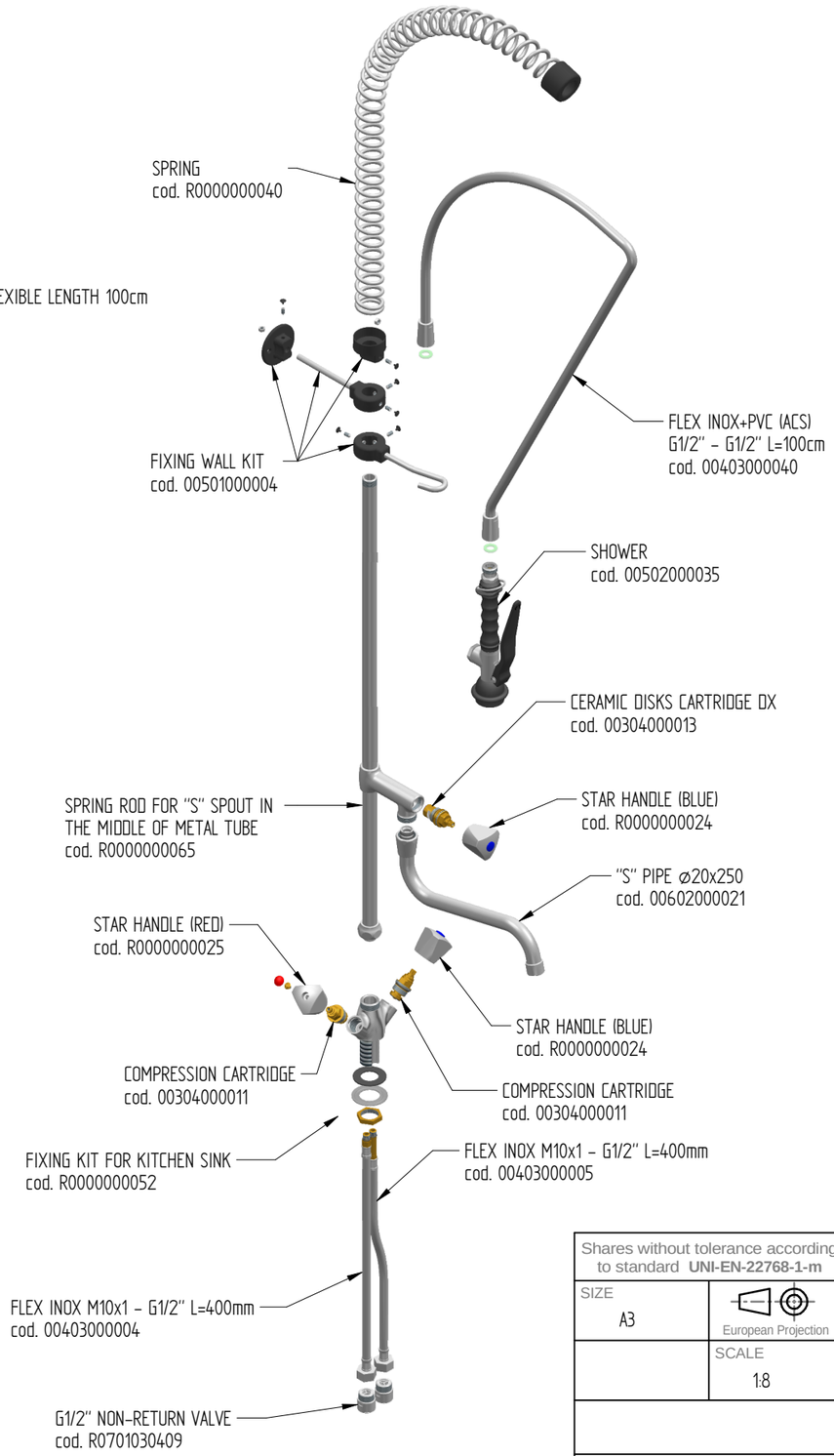

FLOW RATE : 12 L/min at 3,5 BAR only from the shower
14 L/min at 3,5 Bar onlly from the spout
18 L/min at 3,5 BAR when both + spout are open

sink fixing hole : ø27 mm

Shares without tolerance according to standard **UNI-EN-22768-1-m**	DESCRIPTION ONE HOLE PRE-RINSE UNIT WITH SWINGING "S" SPOUT ⌀20x250 IN THE MIDDLE OF THE TUBE, CHROMED STAR HANDLE AND BASIC SHOWER HAND, NON-RETURN VALVES	CODE CW8003-MT
SIZE A3 — European Projection		WEIGHT 4,54 Kg
SCALE 1:8	Diamond	

DONE WITH DESIGN CAD - PROHIBITED THE CHANGES MANUAL

Rev. 00