Diamond

MOD : CW8002-MT

Production code : P01B1020127

02/2026

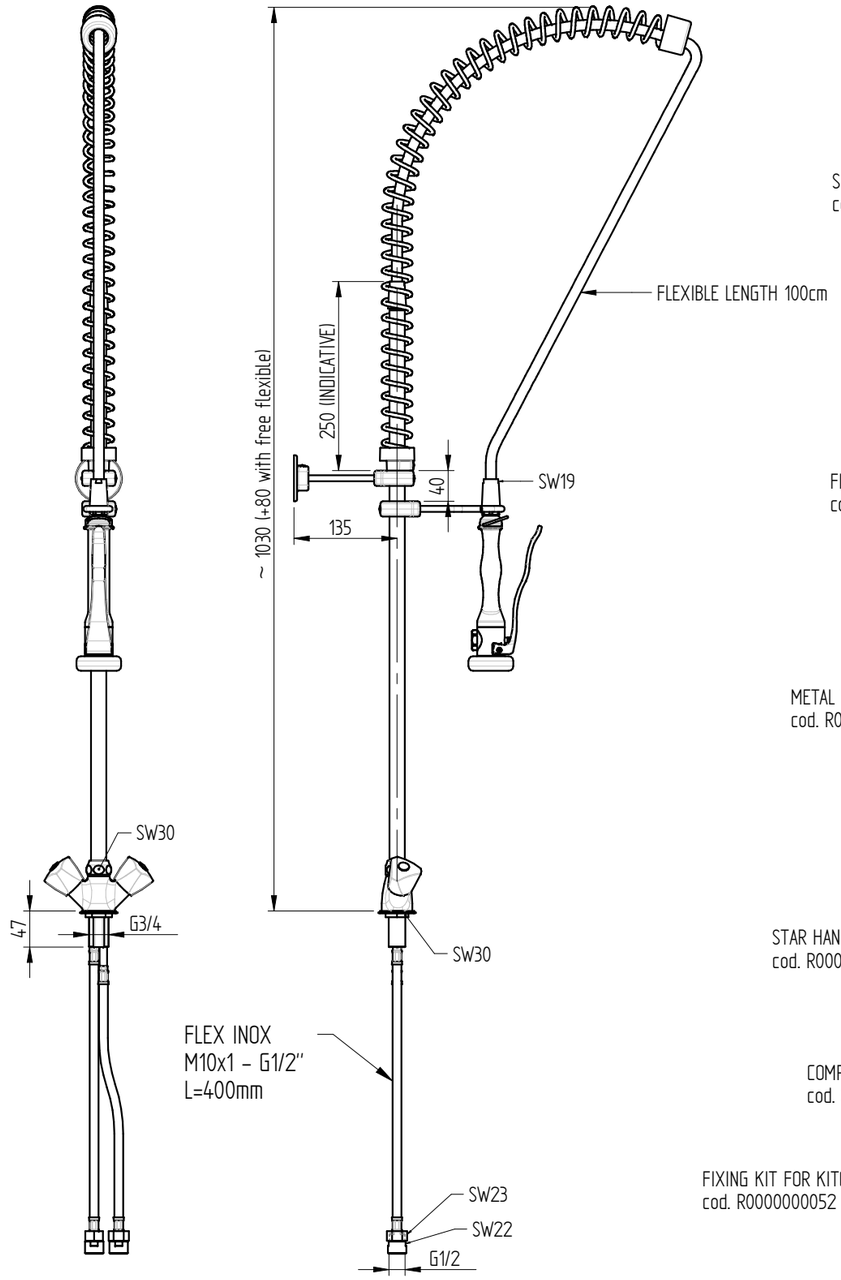

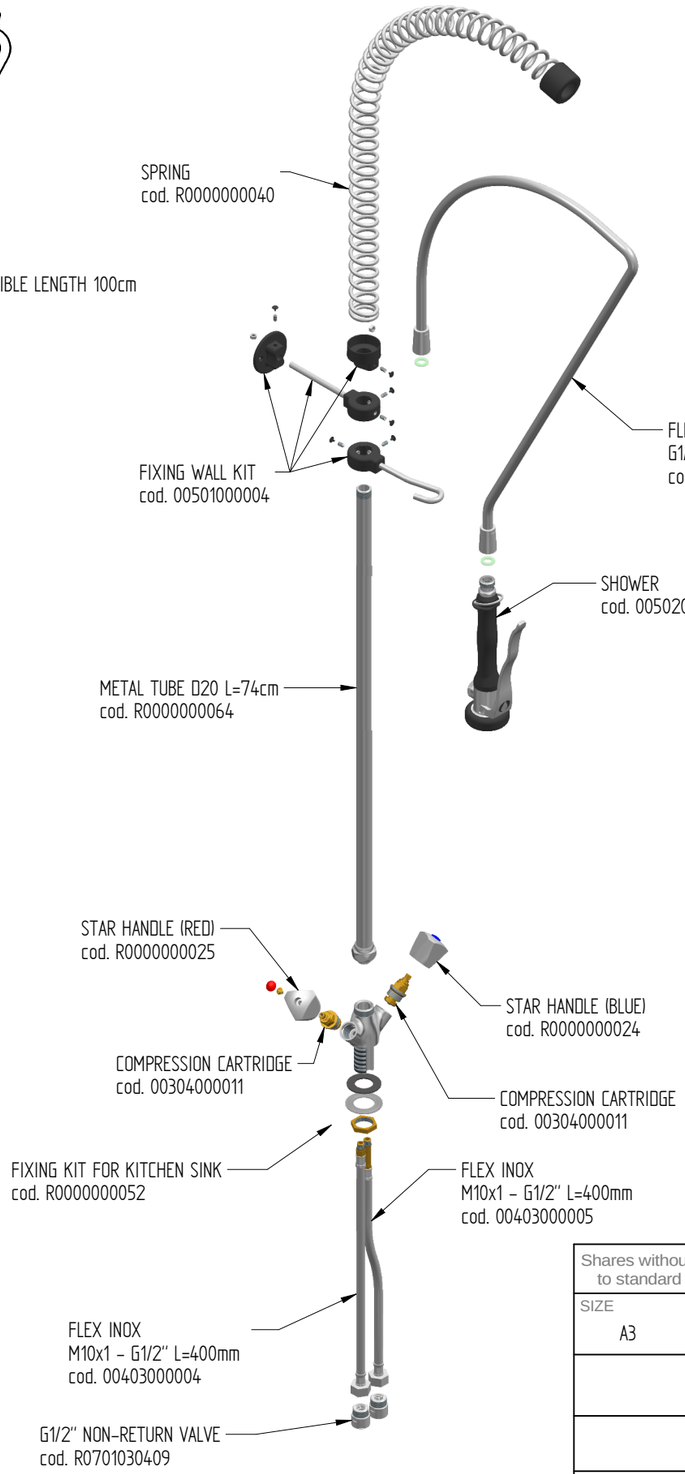

FLOW RATE : 12 L/min at 3,5 BAR only from the shower

sink fixing hole : ø27 mm

Shares without tolerance according to standard **UNI-EN-22768-1-m**	DESCRIPTION		CODE
SIZE A3	European Projection	ONE HOLE PRE-RINSE UNIT WITH CHROMED STAR HANDLE AND PREMIUM SHOWER HAND. NON-RETURN VALVES	CW8002-MT
	SCALE 1:8		WEIGHT 4,12 Kg

Diamond

DONE WITH DESIGN CAD - PROHIBITED THE CHANGES MANUAL

Rev. 00