Diamond

MOD : MA20/E8-R2V

Production code : BK200PBCGD110H

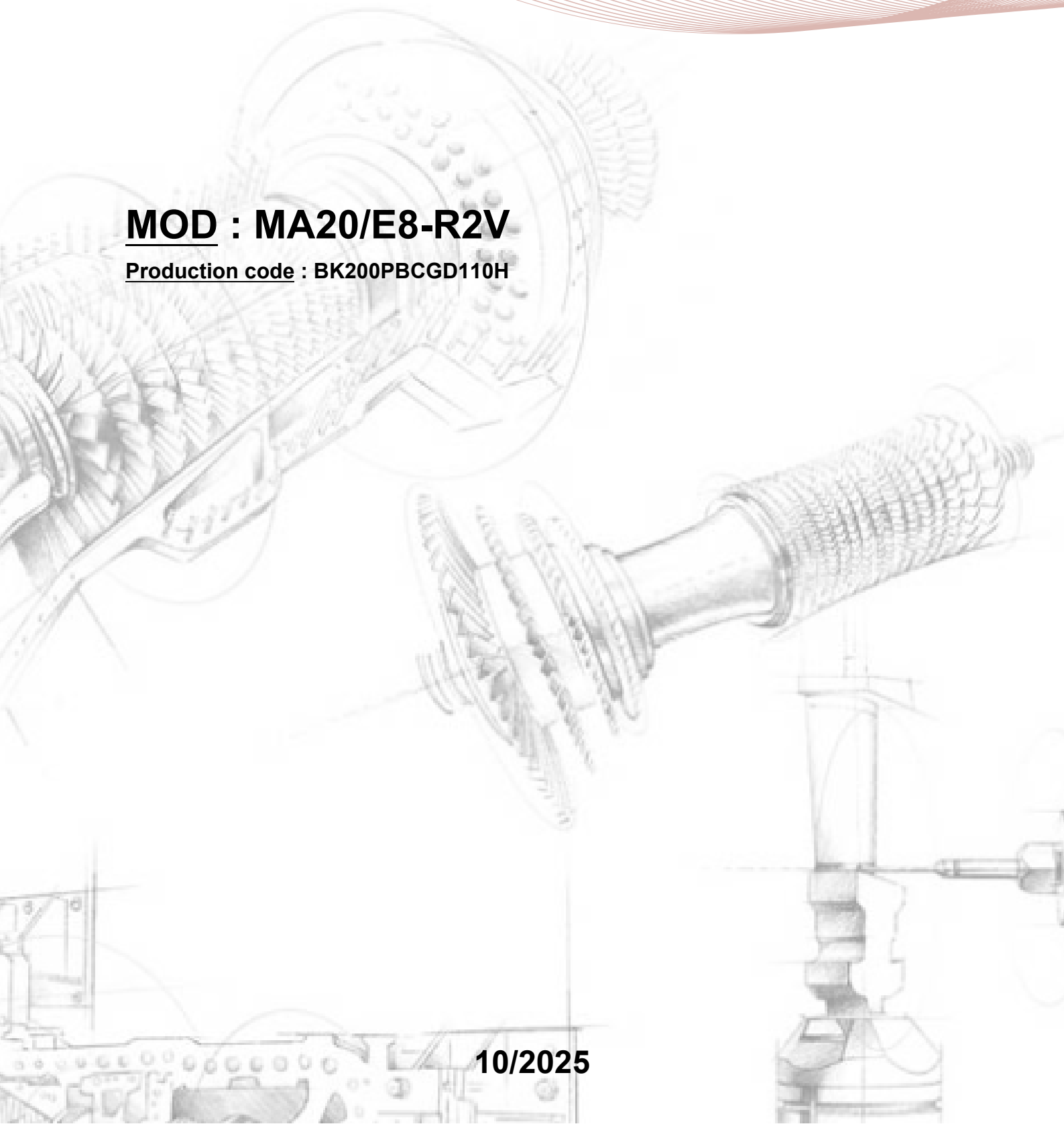

10/2025

EV3 L series

Controllers for refrigerated cabinets, counters and islands

PLEASE READ CAREFULLY
and save this document
CONSIDER THE ENVIRONMENT

E ENGLISH

- Controllers for normal and low temperature units.
- Power supply 115 or 230 VAC (according to the model).
- Cabinet probe and evaporator probe (NTC).
- Door switch input.
- Compressor relay 16 A res. @ 250 VAC.

Purchasing code	Relays	Probes (NTC)	Power supply
EV3L21N5	1	1	115 VAC
EV3L21N7	1	1	230 VAC
EV3L22N5	2	2	115 VAC
EV3L22N7	2	2	230 VAC
EV3L23N5	3	2	115 VAC
EV3L23N7	3	2	230 VAC

1 MEASUREMENTS AND INSTALLATION

Measurements in mm (inches). To be fitted to a panel, snap-in brackets provided.

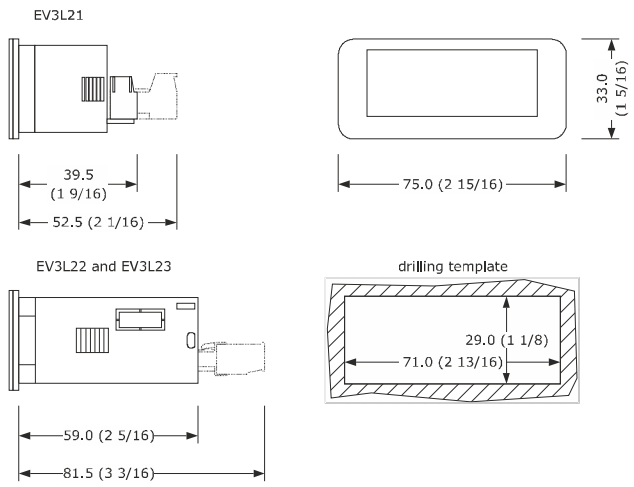

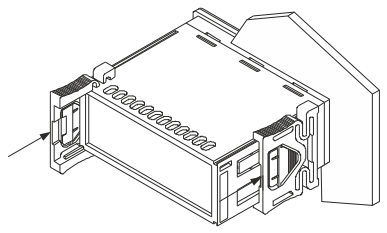

INSTALLATION PRECAUTIONS

- The thickness of the panel must be between 0.8 and 2.0 mm (1/32 and 1/16 in)
- Ensure that the working conditions are within the limits stated in the *TECHNICAL SPECIFICATIONS* section.
- Do not install the device close to heat sources, equipment with a strong magnetic field, in places subject to direct sunlight, rain, damp, excessive dust, mechanical vibrations or shocks.
- In compliance with safety regulations, the device must be installed properly to ensure adequate protection from contact with electrical parts. All protective parts must be fixed in such a way as to need the aid of a tool to remove them.

2 ELECTRICAL CONNECTION

N.B.
- Use cables of an adequate section for the current running through them.
- To reduce any electromagnetic interference connect the power cables as far away as possible from the signal cables.

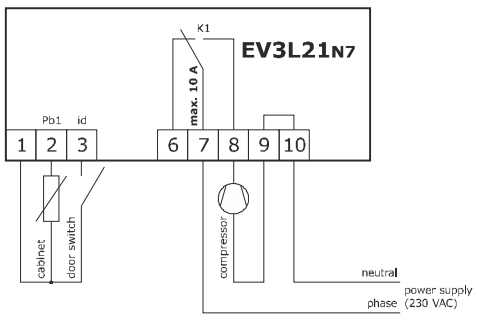

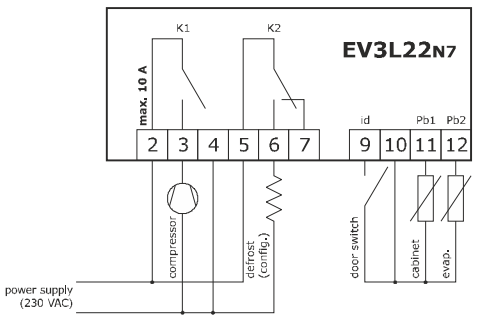

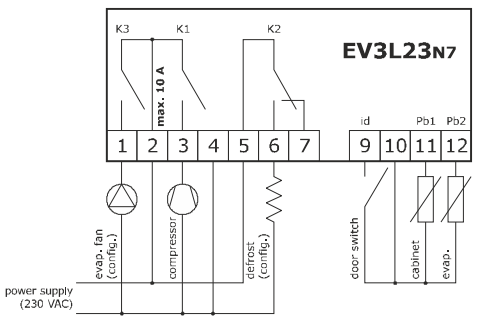

PRECAUTIONS FOR ELECTRICAL CONNECTION

- If using an electrical or pneumatic screwdriver, adjust the tightening torque.
- If the device has been moved from a cold to a warm place, the humidity may have caused condensation to form inside. Wait about an hour before switching on the power.
- Make sure that the supply voltage, electrical frequency and power are within the set limits. See the section *TECHNICAL SPECIFICATIONS*.
- Disconnect the power supply before doing any type of maintenance.
- Do not use the device as safety device.
- For repairs and for further information, contact the EVCO sales network.

3 FIRST-TIME

1. Install following the instructions given in the section *MEASUREMENTS AND INSTALLATION*.
2. Power up the device as shown in the section *ELECTRICAL CONNECTION* and an internal test will be run.
   The test normally takes a few seconds, when it is finished the display will switch off.
3. Configure the device as shown in the section *Setting configuration parameters*.
   Recommended configuration parameters for first-time use.

PAR.	DEF.	PARAMETER	MIN... MAX.
SP	**0**	setpoint	r1... r2
P2	**0**	temperature unit of measurement	0 = °C 1 = °F
d1	**0**	defrost type	0 = electric 1 = hot gas

   Then check that the remaining settings are appropriate; see the section *CONFIGURATION PARAMETERS*.
4. Disconnect the device from the mains.
5. Make the electrical connection as shown in the section *ELECTRICAL CONNECTION* without powering up the device.
6. Power up the device.

4 USER INTERFACE AND MAIN FUNCTIONS

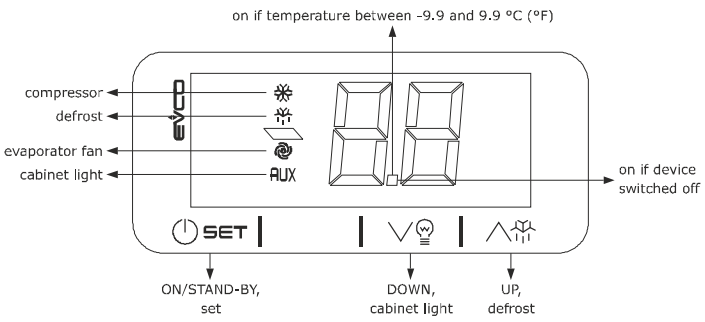

4.1 Switching the device on/off

1. SET — Touch the ON/STAND-BY key for 3 s.

If the device is switched on, the display will show the cabinet temperature; if the display shows an alarm code, see the section *ALARMS*.

LED	ON	OFF	FLASHING
❄	compressor on	compressor off	- compressor protection active - setpoint setting active
	defrost active	-	- defrost delay active - dripping active
	evaporator fan on	evaporator fan off	evaporator fan stop active
AUX	cabinet light on	cabinet light off	cabinet light on by digital input

If 30 s have elapsed without the keys being pressed, the display will show the "**Lo**" label and the keypad will lock automatically.

4.2 Unlock keypad

Touch a key for 3 s: the display will show the label "**Un**".

4.3 Set the setpoint

Check that the keypad is not locked.

1. SET — Touch the ON/STAND-BY key.
2. Touch the UP or DOWN key within 30 s to set the value within the limits r1 and r2 (default "-40... 50")
3. SET — Touch the ON/STAND-BY key (or do not operate for 30 s).

4.4 Activate manual defrost

Check that the keypad is not locked.

1. Touch the UP key for 3 s.

If P4 = 1 (default), defrost is activated provided that the evaporator temperature is lower than the d2 threshold.

4.5 Cabinet light on/off (if u1 or u2 = 2)

1. Touch the DOWN key.

5 ADDITIONAL FUNCTIONS

5.1 View the evaporator temperature

Check that the keypad is not locked.

1. Touch the DOWN key for 4 s.
2. SET — Touch the ON/STAND-BY key (or do not operate for 30 s) to exit the procedure.

6 SETTINGS

6.1 Setting configuration parameters

Check that the device is switched on and the keypad is not locked.

1. SET — Touch the ON/STAND-BY key for 6 s: once 3 s have elapsed the display will switch off, once 6 s have elapsed the display will show the label "**PA**".
2. SET — Touch the ON/STAND-BY key again.
3. Touch the UP or DOWN key within 30 s to set the PS value (default "**-19**").
4. SET — Touch the ON/STAND-BY key: the display will show the label "**SP**".
5. Touch the UP or DOWN key to select a parameter.
6. SET — Touch the ON/STAND-BY key.
7. Touch the UP or DOWN key within 30 s to set the value.
8. SET — Touch the ON/STAND-BY key.
9. SET — Touch the ON/STAND-BY key for 3 s (or do not operate for 30 s) to exit the procedure.

6.2 Restore the factory settings (default) and store customized settings as default

N.B.
- Check that the factory settings are appropriate; see the section *CONFIGURATION PARAMETERS*.
- the storing of customized settings overwrites the default.

Check that the device is switched on and the keypad is not locked.

1. SET — Touch the ON/STAND-BY key for 6 s: once 3 s have elapsed the display will switch off, once 6 s have elapsed the display will show the label "**PA**".
2. SET — Touch the ON/STAND-BY key again.
3. Touch the UP or DOWN key within 30 s to set "**49**".
4. SET — Touch the ON/STAND-BY key again: the display will show the label "**dF**".
5. SET — Touch the ON/STAND-BY key again.
6. Touch the UP or DOWN key within 30 s to set the value.

VAL.	DESCRIPTION
1	value to restore the factory settings (default)
-2	value to store customized settings as default

7. SET — Touch the SET key: the device will exit the procedure.
8. SET — Touch the SET key 2 s before action 6. (or do not operate for 30 s) to exit the procedure beforehand.

7 CONFIGURATION PARAMETERS

N.	PAR.	DEF.	SETPOINT	MIN... MAX.
1	SP	**2**	setpoint	r1... r2
N.	**PAR.**	**DEF.**	**ANALOGUE INPUTS**	**MIN... MAX.**
2	o1	**0**	cabinet probe offset	-99... 99 °C/°F
3	o2	**0**	evaporator probe offset **not available in EV3L21**	-99... 99 °C/°F
4	P2	**0**	temperature unit of measurement	0 = °C 1 = °F
5	P4	**1**	enable evaporator probe **not available in EV3L21**	0 = no 1 = yes
6	P8	**4**	filter for cabinet temperature display	1... 10 1 = quick 4 = normal 7 = slow 10= very slow
N.	**PAR.**	**DEF.**	**REGULATION**	**MIN... MAX.**
7	r0	**-2**	setpoint differential	-99... 0 °C/°F symmetric 0... 99 °C/°F asymmetric
8	r1	**-40**	minimum setpoint	-99... 99 °C/°F
9	r2	**50**	maximum setpoint	-99... 99 °C/°F
N.	**PAR.**	**DEF.**	**COMPRESSOR**	**MIN... MAX.**
10	C0	**0**	compressor on delay after power-on	0... 99 s x 10
11	C1	**5**	delay between 2 compressor switch-ons	0... 99 min
12	C2	**3**	compressor off minimum time	0... 99 min
13	C4	**50**	percentage compressor on during cabinet probe alarm	referred to the average time compressor on 0... On On= 100 %
N.	**PAR.**	**DEF.**	**DEFROST**	**MIN... MAX.**
14	d0	**4**	automatic defrost interval	-99... 1 min (for unit test) 1... 99 h
15	d1	**0**	defrost type **not available in EV3L21**	0 = electric 1 = hot gas
16	d2	**2**	threshold for defrost end **not available in EV3L21**	-99... 99 °C/°F
17	d3	**25**	defrost duration **not available in EV3L21**	0... 99 min if P4 = 1, maximum duration
18	d7	**2**	dripping time **not available in EV3L21**	0... 99 min
19	d8	**0**	defrost relay status during dripping **not available in EV3L21**	0 = not active 1 = active
20	d9	**0**	compressor on consecutive time for hot gas defrost **not available in EV3L21**	0... 99 min
N.	**PAR.**	**DEF.**	**ALARMS**	**MIN... MAX.**
21	A1	**-99**	threshold for low temperature alarm	-99... 99 °C/°F
22	A4	**99**	threshold for high temperature alarm	-99... 99 °C/°F
23	A5	**-2**	high/low temperature alarms reset differential	-99... 0 °C/°F absolute alarms 0... 99 °C/°F alarms relative to setpoint
24	A7	**2**	high/low temperature alarms delay	0... 99 min x 10 1 h after defrost
N.	**PAR.**	**DEF.**	**FANS not available in EV3L21**	**MIN... MAX.**
25	F0	**0**	evaporator fan mode during normal operation	0 = on 1 = on if compressor on 2 = thermoregulated (with F1
26	F1	**-1**	threshold for evaporator fan operation	-99... 99 °C/°F differential = 1 °C/2 °F
27	F2	**0**	evaporator fan mode during dripping	0 = off 1 = on
28	F3	**2**	evaporator fan off time	0... 99 min
2	F4	**30**	evaporator fan off time with compressor off	0... 99 s x 10
30	F5	**10**	evaporator fan on time with compressor off	0... 99 s x 10
N.	**PAR.**	**DEF.**	**DIGITAL INPUTS**	**MIN... MAX.**
31	i0	**0**	door switch input function **options 0 and 2 not available in EV3L21**	0 = cabinet light on 1 = compressor + evaporator fan off, cabinet light on 2 = evaporator fan off, cabinet light on
32	i1	**0**	door switch input activation	0 = with contact closed 1 = with contact open
33	i2	**30**	open door alarm delay; also regulation inhibition maximum time with door open	-1... 99 min -1 = disabled
N.	**PAR.**	**DEF.**	**DIGITAL OUTPUTS**	**MIN... MAX.**
34	u1	**1**	auxiliary output 1 configuration (relay K2) **not available in EV3L21**	0 = evaporator fan 1 = defrost 2 = cabinet light
35	u2	**0**	auxiliary output 2 configuration (relay K3) **not available in EV3L21 and EV3L22**	0 = evaporator fan 1 = defrost 2 = cabinet light
N.	**PAR.**	**DEF.**	**SAFETIES**	**MIN... MAX.**
36	nS	**0**	compressor start-up number	0... 99 x 10,000
37	PS	**-19**	password	-99... 99 min 0 = disabilitata
38	MP	**1**	parameters map identification	0... 9

8 ALARMS

COD.	DESCRIPTION	RESET	REMEDIES
P1	cabinet probe alarm	automatic	- check probe integrity - check electrical connection
P2	evaporator probe alarm	automatic	
AL	low temperature alarm	automatic	check A1
AH	high temperature alarm	automatic	check A4
id	open door alarm	automatic	check i0 e i1

9 TECHNICAL SPECIFICATIONS

Purpose of the control device		Function controller
Construction of the control device		Built-in electronic device
Container		Black, self-extinguishing
Category of heat and fire resistance		D
Measurements		
With fixed screw terminal blocks: 75.0 x 33.0 x 39.5 mm (2 15/16 x 1 5/16 x 1 9/16 in) for EV3L21, 75.0 x 33.0 x 59.0 mm (2 15/16 x 1 5/16 x 2 5/16 in) otherwise		With removable screw terminal blocks: 75.0 x 33.0 x 52.5 mm (2 15/16 x 1 5/16 x 2 1/16 in) for EV3L21, 75.0 x 33.0 x 81.5 mm (2 15/16 x 1 5/16 x 3 3/16 in) otherwise
Mounting methods for the control device		To be fitted to a panel, snap-in brackets provided
Degree of protection provided by the covering		IP65 (front)
Connection method		
Fixed screw terminal blocks for wires up to 2,5 mm²		Removable screw terminal blocks for wires up to 2,5 mm²; by request
Maximum permitted length for connection cables		
Power supply: 10 m (32.8 ft)		Analogue inputs: 10 m (32.8 ft)
Digital inputs: 10 m (32.8 ft)		Digital outputs: 10 m (32.8 ft)
Operating temperature		From 0 to 55 °C (from 32 to 131 °F)
Storage temperature		From -25 to 70 °C (from -13 to 158 °F)
Operating humidity		Relative humidity without condensate from 10 to 90 %
Pollution status of the control device		2
Conformity		
RoHS 2011/65/CE	WEEE 2012/19/EU	REACH (EC) Regulation 1907/2006
EMC 2014/30/UE		LVD 2014/35/UE
Power supply		230 VAC (+10% -15%), 50/60 Hz (±3 Hz), max. 3 VA isolated
Earthing methods for the control device		None
Rated impulse-withstand voltage		4 KV
Over-voltage category		III
Software class and structure		A
Analogue inputs		- 1 in EV3L21 (cabinet probe) - 2 in EV3L22 and EV3L23 (cabinet probe and evaporator probe) for NTC probes
NTC probes	Sensor type	ß3435 (10 KΩ @ 25 °C, 77 °F)
	Measurement field	From -40 to 90 °C (from -40 to 194 °F)
	Resolution	- 0.1 °C (0.1 °F) between -9.9 and 9.9 - 1 °C (1 °F) otherwise
Digital inputs		1 dry contact (door switch)
Dry contact	Contact type	5 VDC, 1.5 mA
	Protection	None
Digital outputs		- 1 in EV3L21 (K1) - 2 in EV3L22 (K1 and K2) - 3 in EV3L23 (K1, K2 and K3) electro-mechanical relays **The maximum current allowed on the loads is 10 A**
Relay K1 (compressor):		SPST, 16 A res. @ 250 VAC
Relay K2 (auxiliary output 1, default defrost):		SPDT, 8 A res. @ 250 VAC
Relay K3 (auxiliary output 2, default evaporator fan):		SPST, 5 A res. @ 250 VAC
Type 1 or Type 2 Actions		Type 1
Additional features of Type 1 or Type 2 actions		C
Displays		2 digits custom display 17 mm (11/16 in) high, with function icons

N.B.
The device must be disposed of according to local regulations governing the collection of electrical and electronic waste.

This document and the solutions contained therein are the intellectual property of EVCO and thus protected by the Italian Intellectual Property Rights Code (CPI). EVCO imposes an absolute ban on the full or partial reproduction and disclosure of the content other than with the express approval of EVCO. The customer (manufacturer, installer or end-user) assumes all responsibility for the configuration of the device. EVCO accepts no liability for any possible errors in this document and reserves the right to make any changes, at any time without prejudice to the essential functional and safety features of the equipment.

EVCO Every Control Group
EVCO S.p.A.
Via Feltre 81, 32036 Sedico (BL) ITALY
telefono 0437 8422 | **fax** 0437 83648
email info@evco.it | **web** www.evco.it