11/2016

Mod: EDI/BM4

Production code: 65/40 BME-D

Diamond
catering equipment

Mod./Type:	_65/... BME...-D	cod./num.	2532348.00
		data/date:	02/11/2016

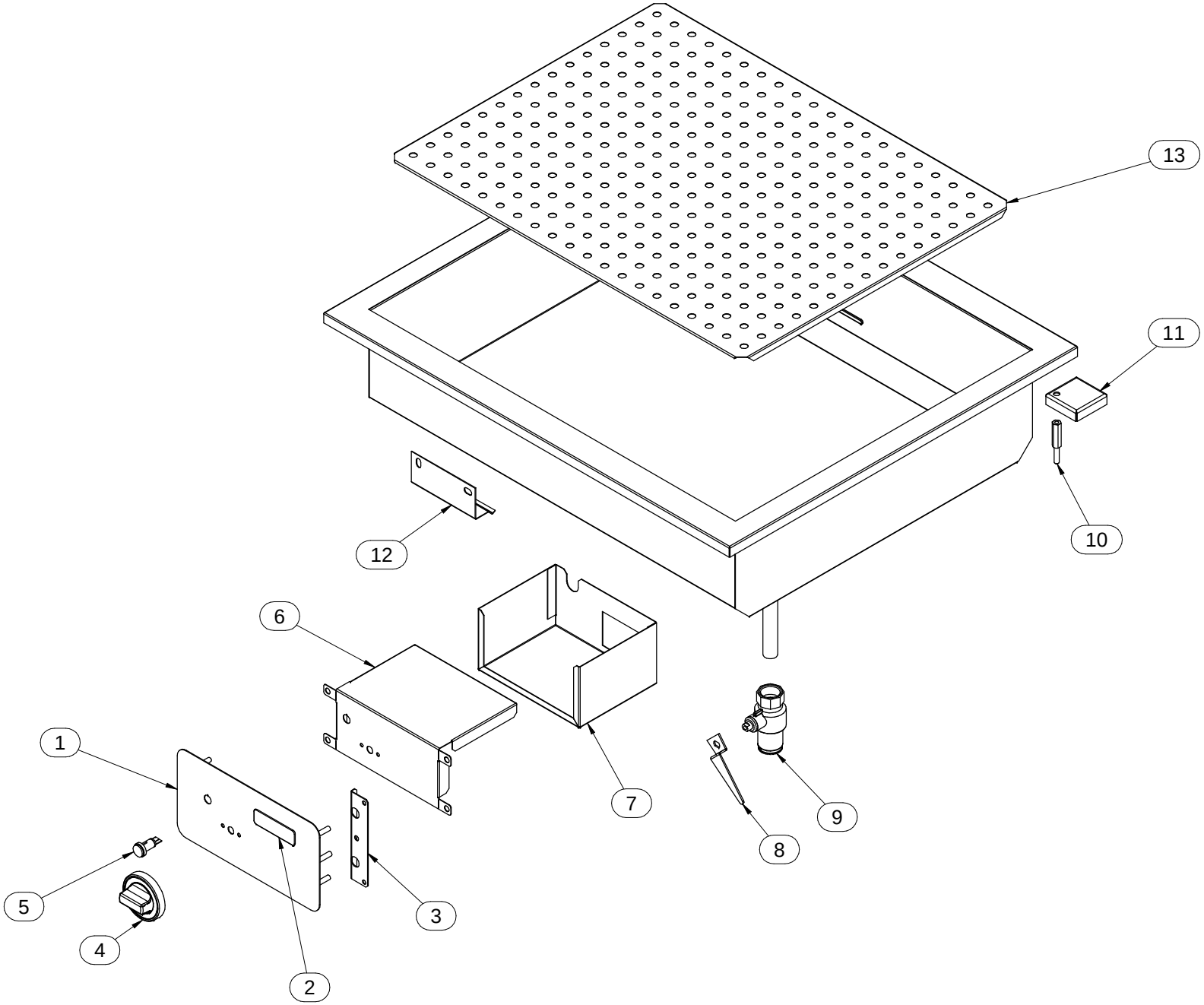

Mod.:	_65/… BME...-D			cod. / num. 2532352.00 data / date 02/11/2016 rif. / ref. 2532348.00		RICAMBI CONSIGLIATI - RECOMMENDED SPARE PARTS - PIÈCES DÉTACHÉES RECOMMANDÉES - EMPFOHLENEN ERSATZTEILE	65/40 BME-D	65/70 BME-D	65/70 BME 2-D	NOTE
POS.	DESCRIZIONE	DESCRIPTION	DENOMINATION	BENENNUNG	COD.		Q.ty			
1	CRUSCOTTO	CONTROL PANEL	BANDEAU	BEDIENBLENDE	6111978.00		1	1	1	
2	MARCHIO	BRAND NAME	MARQUE	MARKENZEICHEN	250.605.00		1	1	1	
3	STAFFA	BRACKET	SUPPORT	HALTERUNG	623.611.00		2	2	2	
4	MANOPOLA	KNOB	BOUTON	DREHKNOPF	612.073.00	*	1	1	1	
5	LAMPADA SPIA ARANCIO	ORANGE INDICATOR LIGHT	LAMPE TEMOIN ORANGE	ORANGE KONTROLLAMPE	663.044.00		1	1	1	
6	CHIUSURA	LOCK	FERMETURE	SCHLUSS	6212293.00		1	1	1	
7	SCATOLA	BOX	BOÎTE	GEHÄUSE	6212290.00		1	1	1	
8	LEVA RUBINETTO	TAP LEVER	LEVIER ROBINET	HAHNHEBEL	623.027.00		1	1	1	
9	RUBINETTO	TAP	ROBINET	WASSERHAHN	256.047.00		1	1	1	
10	PERNO	PIVOT	PIVOT	STIFT	641.000.00		4	4	4	
11	STAFFA	BRACKET	SUPPORT	HALTERUNG	623.604.00		4	4	4	
12	SUPPORTO BULBO	LIGHT BULB SUPPORT	SUPPORT AMPOULE	LAGE DER GLÜHLAMPE	9221376.00		1	1	1	
13	FALSOFONDO	FALSE BOTTOM	FAUX-FOND	ABTROPFPLATTE	621.035.00		1			
					621.036.00			1	1	
14										
15										
16										
17										
18										
19										
20										
21										
22										
23										
24										
25										
26										
27										
28										
29										
30										
31										
32										
33										

Mod./Type:	_65/... BME...-D	cod./num.	2532350.00
		data/date:	04/11/2016

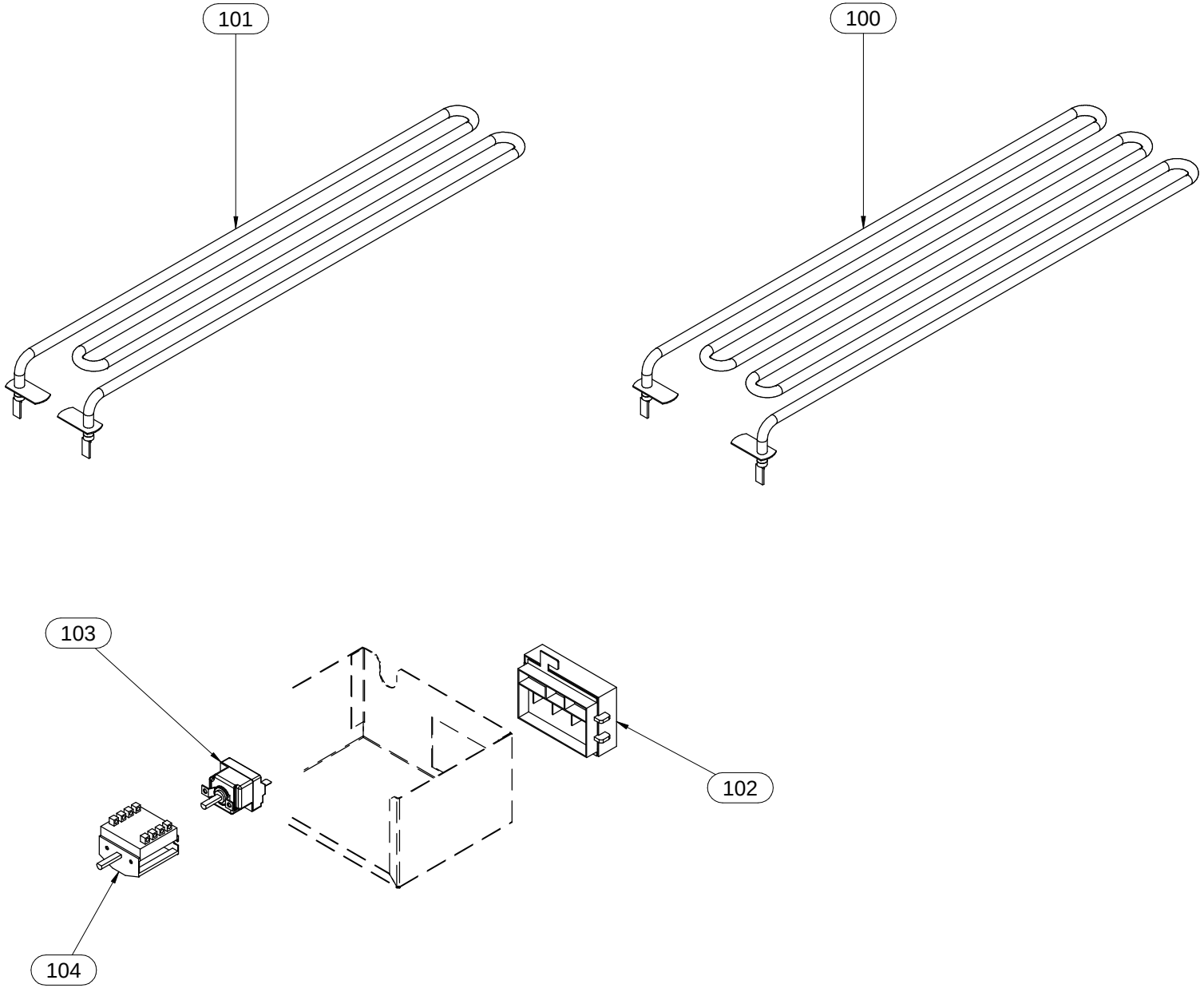

Mod.:	_65/… BME…-D			cod. / num. 2532351.00 data / date 04/11/2016 rif. / ref. 2532350.00		RICAMBI CONSIGLIATI - RECOMMENDED SPARE PARTS - PIÈCES DÉTACHÉES RECOMMANDÉES - EMPFOHLENEN ERSATZTEILE	65/40 BME-D	65/70 BME-D	65/70 BME 2-D	NOTE
POS.	DESCRIZIONE	DESCRIPTION	DENOMINATION	BENENNUNG	COD.		Q.ty			
100	RESISTENZA	HEATING ELEMENT	RESISTANCE	HEINZELEMENT	665.003.00	*	1	-	-	
101	RESISTENZA	HEATING ELEMENT	RESISTANCE	HEINZELEMENT	665.004.00	*	-	3	3	
102	MORSETTIERA	TERMINAL BOARD	BORNES	KLEMMENBRETT	663.040.00		1	1	1	
103	TERMOSTATO	THERMOSTAT	THERMOSTAT	THERMOSTAT	661.004.00	*	1			
					661.005.00	*		1	1	
104	COMMUTATORE	CHANGE-OVER SWITCH	COMMUTATEUR	UMSCHALTER	661.000.00	*	1	1	1	
105										
106										
107										
108										
109										
110										
111										
112										
113										
114										
115										
116										
117										
118										
119										
120										
121										
122										
123										
124										
125										
126										
127										
128										
129										
130										