Diamond

MOD : E60/BM6T-N

Production code : F60/60BME/T

03/2024

	BAGNOMARIA BAIN MARIE WASSERBAD BAIN MARIE MOD. _60/60 BME	CODICE 251.390.00 DATA 23-10-1999

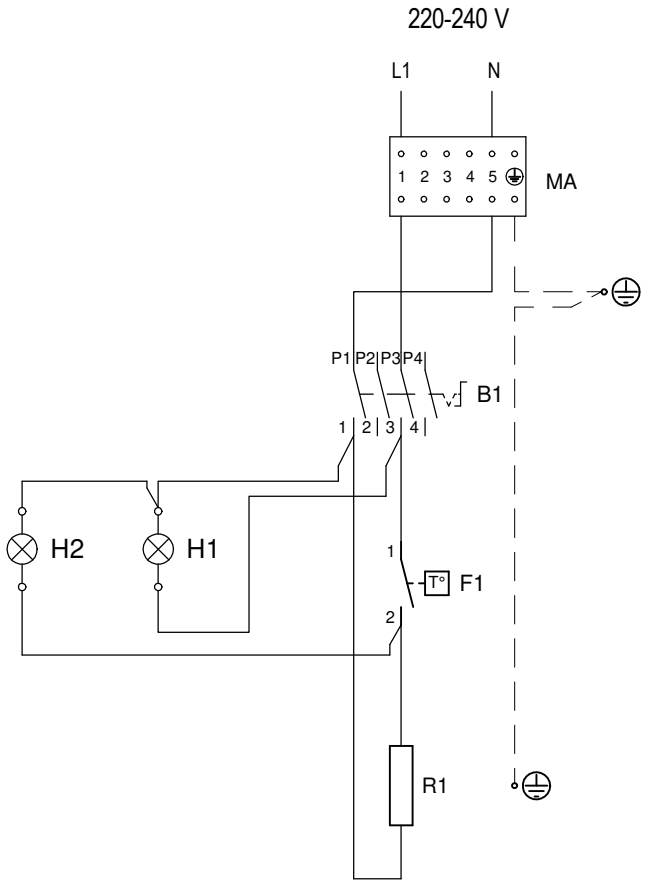

MA- MORSETTIERA ARRIVO LINEA _ POWER INLET TERMINAL BOARD
BORNES ARRIVEE LIGNE _ ANSCHLUSSBRETT

B1- INTERRUTTORE _ SWITCH
INTERRUPTEUR _ SCHALTER

F1- TERMOSTATO _ THERMOSTAT

H1- LAMPADA SPIA VERDE _ GREEN INDICATOR LIGHT
LAMPE TEMOIN VERTE _ GRUNE KONTROLLAMPE

H2- LAMPADA SPIA ARANCIO _ ORANGE INDICATOR LIGHT
LAMPE TEMOIN ORANGE _ ORANGE KONTROLLAMPE

R1- RESISTENZA _ HEATING ELEMENT
RESISTANCE _ HEIZKORPER

POTENZA TOTALE - TOTAL POWER PUISSANCE TOTALE - ANSCHLUSSWERT	3kW	220-240 V	14 A	50-60Hz

SOSTITUISCE PARI NUMERO DEL 26-10-1998